VULCAN·HART

RANGES
BROILERS
FRYERS
ROAST OVENS
BAKE OVENS
BAKER'S STOVES
STEAM JACKETED KETTLES
MEAT ROASTERS
GRIDDLES
COFFEE URNS
FOOD WARMERS
ROLL WARMERS
PASTEURIZERS
VULCAN AUTOSAN
DISHWASHING, SANITIZING AND DRYING EQUIPMENT
VULCAN AUTOMIX
FOOD MIXERS
VULCAN AUTOLIFT
SELF-LEVELING DISPENSERS

Commercial Food Service Equipment

VULCAN·HART
MANUFACTURING CO., INCORPORATED
Louisville • Baltimore

VULCAN·HART

HEAVY DUTY
(GAS)

U. S. Patent Office
MAR 13 1959
Patent Division

VULCAN
HEAVY DUTY RANGES

Model 6730A ■ 6130A ■
SUPER RADIAL FIN TOP RANGE

MAR 13 1959

VULCAN No. 6730A SUPER RADIAL FIN TOP RANGE WITH No. 6782 DOUBLE DECK HIGH SHELF.

VULCAN STERLING STAINLESS STEEL

SPECIFICATIONS

COOKING TOP: Patented Super-Radial Fin construction provides more heat absorption surface than ordinary tops, heats faster, saves gas, and directs flow of heat to every part of top, assuring better heat distribution and greater top capacity. Standard tops are chrome-alloy. Nickel-alloy (Ni-Resist) can be furnished.

OVEN: Extra large size general purpose oven for roasting and baking. Heavy duty plated wire oven rack. Porcelain enameled oven linings. Oven completely insulated and has extra thick, positive spring balanced door mounted in self lubricating orlite bronze bearings. Heated by loop-type burner and has special stainless steel alloy oven bottom to insure against burn-out or warpage. Temperature controlled by Robertshaw heavy duty thermostat. 100% safety shut-off pilot light standard equipment.

CONSTRUCTION: Range is strongly built of heavy gauge rust-resisting material, securely fastened together to give years of satisfactory service. Streamlined flush front. May be installed on legs, toe bases, tile base, or directly on the floor. Approved by American Gas Association for installation anywhere, even on non-fireproof floors.

FINISH: Standard finish is a rich finely grained, black wrinkle finish known as Vulcadur, trimmed with chrome. May also be furnished in partial or entire exterior in stainless steel. The Vulcan Sterling Stainless Steel units will be all stainless steel inside and out.

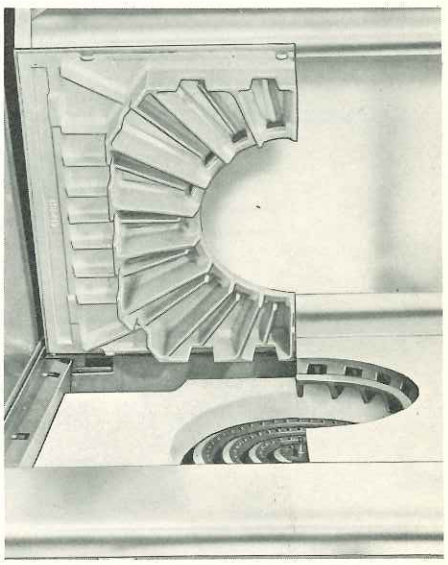

SUPER RADIAL FIN TOP OF No. 6730A & 6130A RANGES

VULCAN • HART MANUFACTURING CO.

Factories and General Offices: BALTIMORE 22, MD. • LOUISVILLE 1, KENTUCKY
Sales Offices and Showrooms: NEW YORK • CHICAGO • LOS ANGELES • SAN FRANCISCO • BOSTON
In Canada: MOFFATS LTD., Weston, Ontario

VULCAN

WORLD'S FINEST COOKING EQUIPMENT

SPECIFICATIONS

SUPER-RADIAL FIN TOP RANGE
With Oven

VULCADUR FINISH	☐ 6130A	☐ 6730A
STERLING STAINLESS STEEL	☐ 16130A	☐ 16730A
Range — Deep	35⅜"	41¼"
Wide	34"	34"
High	31⅝"	31⅝"
High — with toe base or legs	34"	34"
Oven — Wide	26"	26"
Deep	28"	28"
High	14½"	14½"
Burner Ratings in B.T.U.'s per hour —		
Top	45,000	45,000
Oven	45,000	45,000
Gas Manifold	1¼"	1¼"

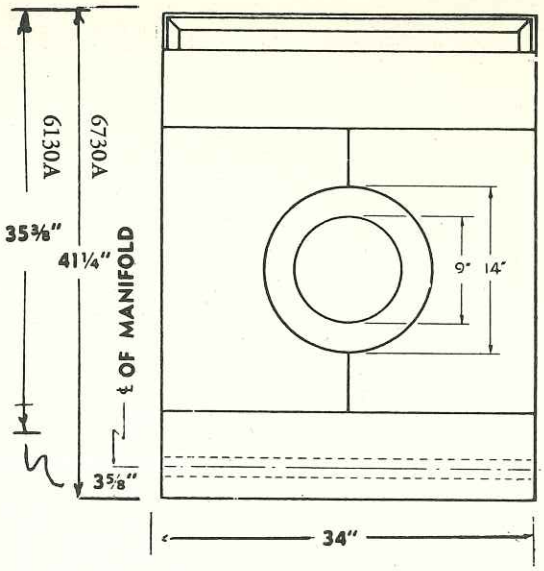

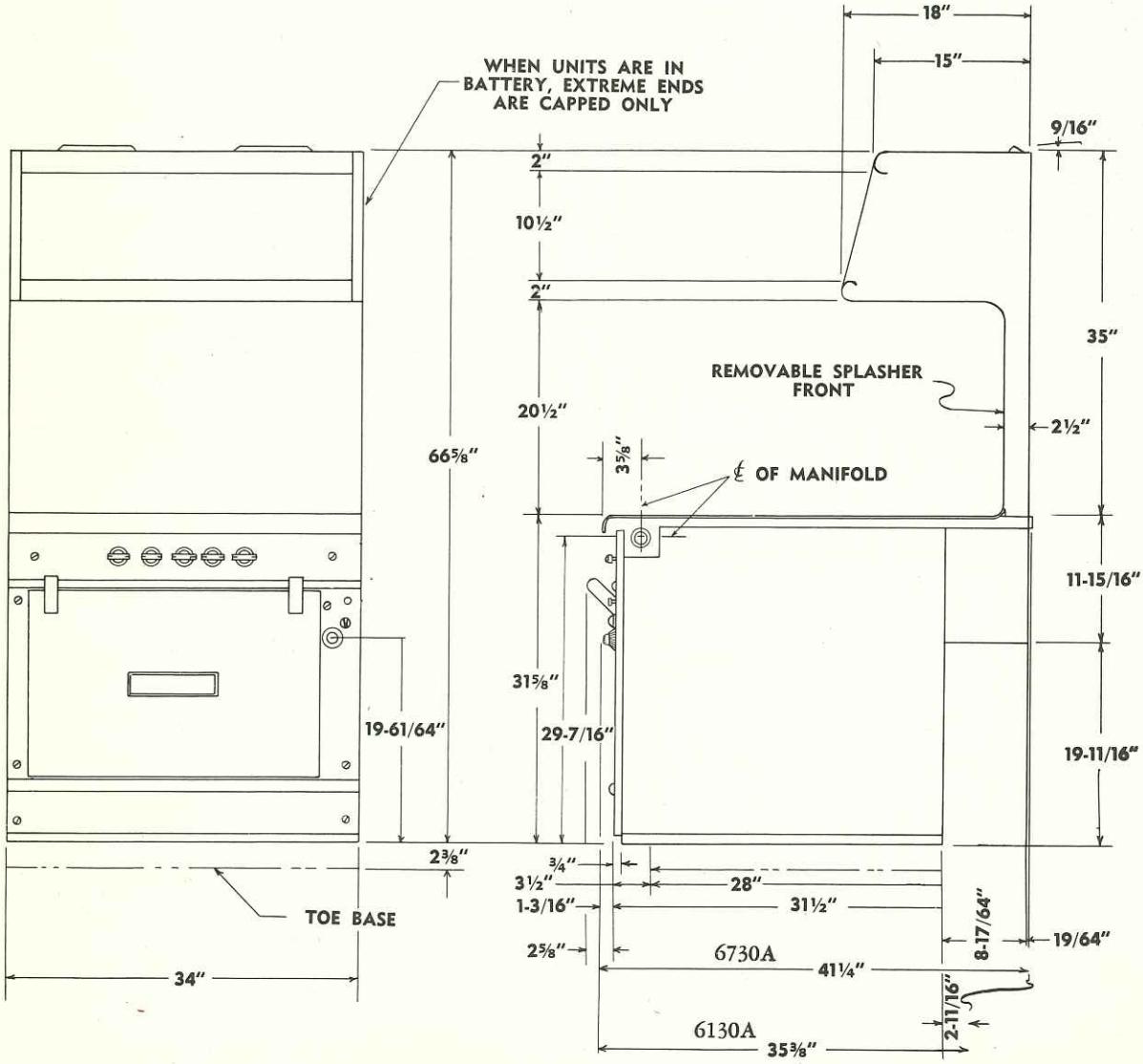

VULCAN-HART MANUFACTURING COMPANY, INCORPORATED

3600 North Point Boulevard
BALTIMORE 22, MARYLAND

VULCAN
HEAVY DUTY RANGES

Model 6745A ■ 6145A ■
OPEN TOP RANGE

VULCAN No. 6745A OPEN TOP RANGE WITH No. 6782 DOUBLE DECK HIGH SHELF.

VULCAN STERLING STAINLESS STEEL

SPECIFICATIONS

COOKING TOP: New semi-solid grate is heavier and stronger. Concentrates heat on utensil. It has smooth continuous surface on top of bars so heavy pots can be easily slid over entire top without lifting. There are four giant, circular, non-clog burners of improved design and are equipped with flash-type lighting. Below burners there is a removable drip tray. Burner box porcelain enameled.

OVEN: Extra large size general purpose oven for roasting and baking. Heavy duty plated wire oven rack. Porcelain enameled oven linings. Oven completely insulated and has extra thick, positive spring balanced door mounted in self lubricating orlite bronze bearings. Heated by loop-type burner and has special stainless steel alloy oven bottom to insure against burn-out or warpage. Temperature controlled by Robertshaw heavy duty thermostat. 100% safety shut-off pilot light standard equipment.

CONSTRUCTION: Range is strongly built of heavy gauge rust-resisting material, securely fastened together to give years of satisfactory service. Streamlined flush front. May be installed on legs, toe bases, tile base, or directly on the floor. Approved by American Gas Association for installation anywhere, even on non-fireproof floors.

FINISH: Standard finish is a rich finely grained, black wrinkle finish known as Vulcadur, trimmed with chrome. May also be furnished in partial or entire exterior in stainless steel. The Vulcan Sterling Stainless Steel units will be all stainless steel inside and out.

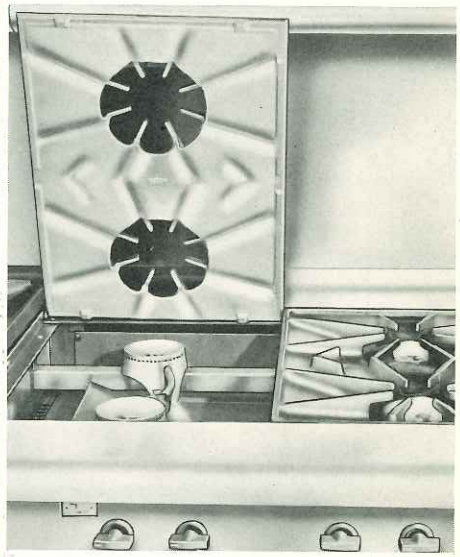

OPEN TOP OF No. 6745A & 6145A RANGES

VULCAN • HART MANUFACTURING CO.

Factories and General Offices: BALTIMORE 22, MD. • LOUISVILLE 1, KENTUCKY
Sales Offices and Showrooms: NEW YORK • CHICAGO • LOS ANGELES • SAN FRANCISCO • BOSTON
In Canada: MOFFATS LTD., Weston, Ontario

VULCAN

WORLD'S FINEST COOKING EQUIPMENT

SPECIFICATIONS

OPEN TOP RANGE
With Oven

VULCADUR FINISH	☐ 6145A	☐ 6745A
STERLING STAINLESS STEEL	☐ 16145A	☐ 16745A
Range — Deep	35⅜"	41¼"
Wide	34"	34"
High	31⅝"	31⅝"
High — with toe base or legs	34"	34"
Oven — Wide	26"	26"
Deep	28"	28"
High	14½"	14½"
Burner Ratings in B.T.U.'s per hour —		
Top	60,000	60,000
Oven	45,000	45,000
Gas Manifold	1¼"	1¼"

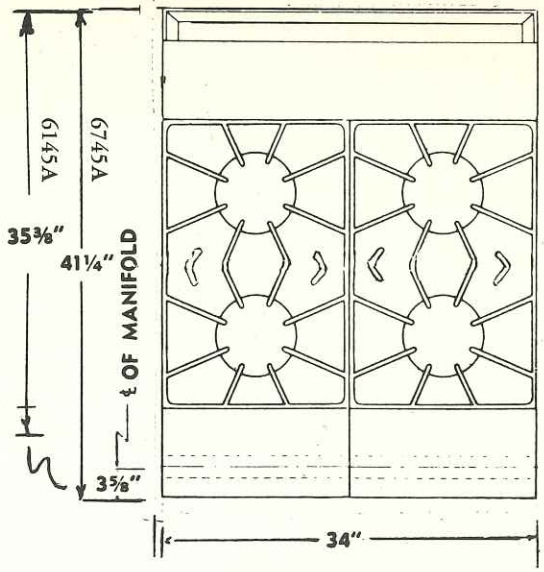

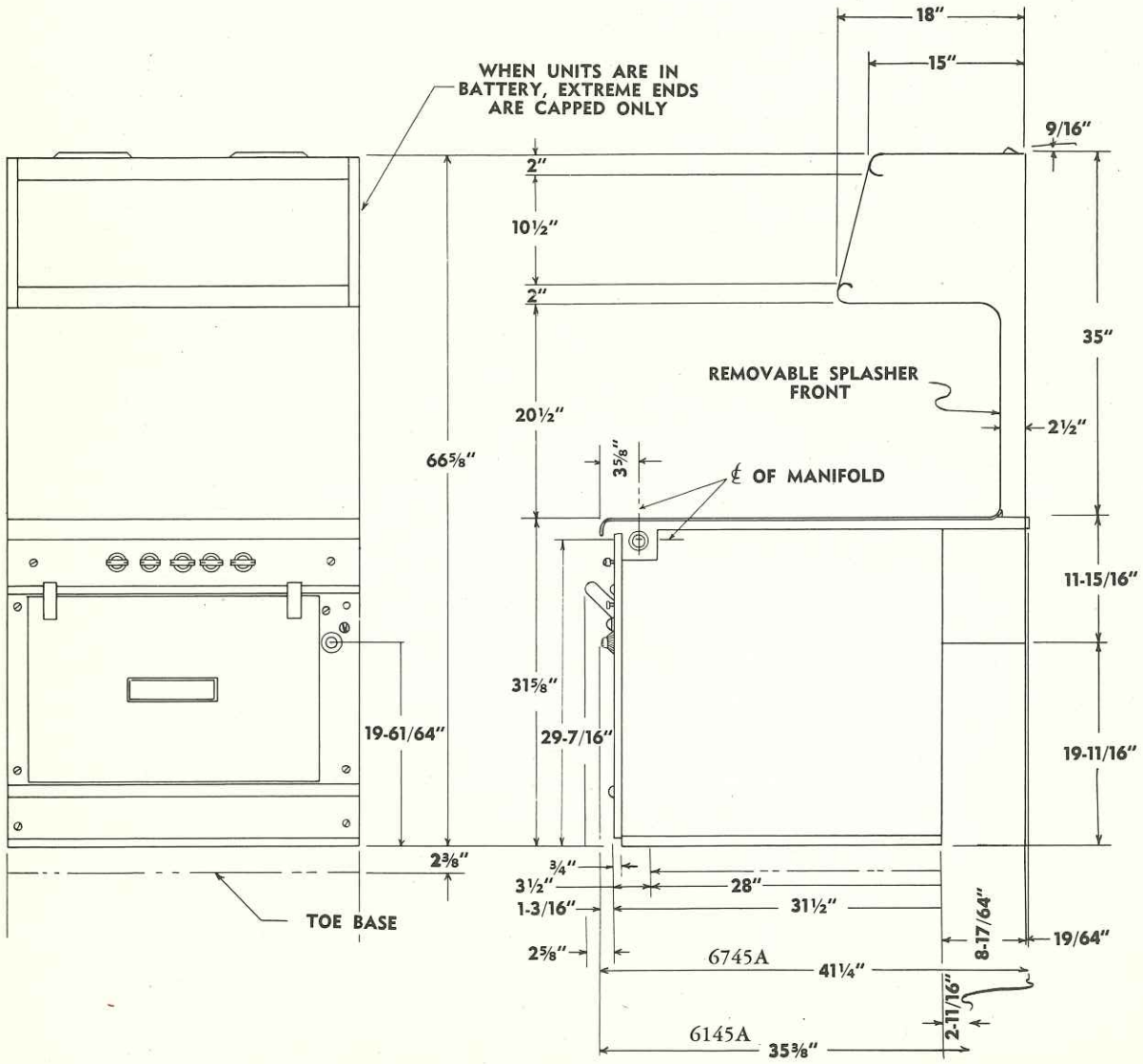

VULCAN-HART MANUFACTURING COMPANY, INCORPORATED

3600 North Point Boulevard
BALTIMORE 22, MARYLAND

VULCAN
HEAVY DUTY RANGES

Model 6751A ■ 6151A ■
HOT TOP RANGE

VULCAN No. 6751A HOT TOP RANGE WITH No. 6782 DOUBLE DECK HIGH SHELF AND TOE BASE.

VULCAN STERLING STAINLESS STEEL

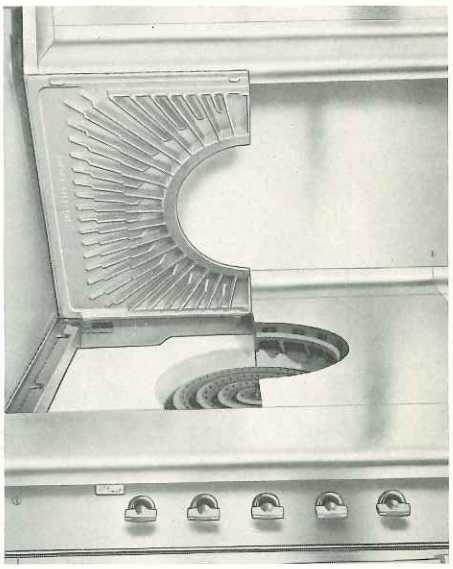

HOT TOP OF No. 6751A & 6151A RANGES

SPECIFICATIONS

COOKING TOP: Polished chrome-alloy top castings — two half moon sections with patented radial fins to carry heat over entire top. Efficient high temperature center lid and ring. May be furnished in nickel-alloy (Ni-Resist). Patented 4-ring, 4-control aerated hot blast burner gives maximum flexibility, speed and economy. Target type lighter. Extra thick refractory insulating fire brick. Burner box porcelain enameled. Standard tops are chrome-alloy.

OVEN: Extra large size general purpose oven for roasting and baking. Heavy duty plated wire oven rack. Porcelain enameled oven linings. Oven completely insulated and has extra thick, positive spring balanced door mounted in self lubricating orlite bronze bearings. Heated by loop-type burner and has special stainless steel alloy oven bottom to insure against burn-out or warpage. Temperature controlled by Robertshaw heavy duty thermostat. 100% safety shut-off pilot light standard equipment.

CONSTRUCTION: Range is strongly built of heavy gauge rust-resisting material, securely fastened together to give years of satisfactory service. Streamlined flush front. May be installed on legs, toe bases, tile base, or directly on the floor. Approved by American Gas Association for installation anywhere, even on non-fireproof floors.

FINISH: Standard finish is a rich finely grained, black wrinkle finish known as Vulcadur, trimmed with chrome. May also be furnished in partial or entire exterior in stainless steel. The Vulcan Sterling Stainless Steel units will be all stainless steel inside and out.

VULCAN • HART MANUFACTURING CO.

Factories and General Offices: BALTIMORE 22, MD. • LOUISVILLE 1, KENTUCKY
Sales Offices and Showrooms: NEW YORK • CHICAGO • LOS ANGELES • SAN FRANCISCO • BOSTON
In Canada: MOFFATS LTD., Weston, Ontario

VULCAN

WORLD'S FINEST COOKING EQUIPMENT

SPECIFICATIONS

HOT-TOP RANGE
With Oven

VULCADUR FINISH	☐ 6151A	☐ 6751A
STERLING STAINLESS STEEL	☐ 16151A	☐ 16751A
Range — Deep	35⅜"	41¼"
Wide	34"	34"
High	31⅝"	31⅝"
High — with toe base or legs	34"	34"
Oven — Wide	26"	26"
Deep	28"	28"
High	14½"	14½"
Burner Ratings in B.T.U.'s per hour —		
Top	50,000	50,000
Oven	45,000	45,000
Gas Manifold	1¼"	1¼"

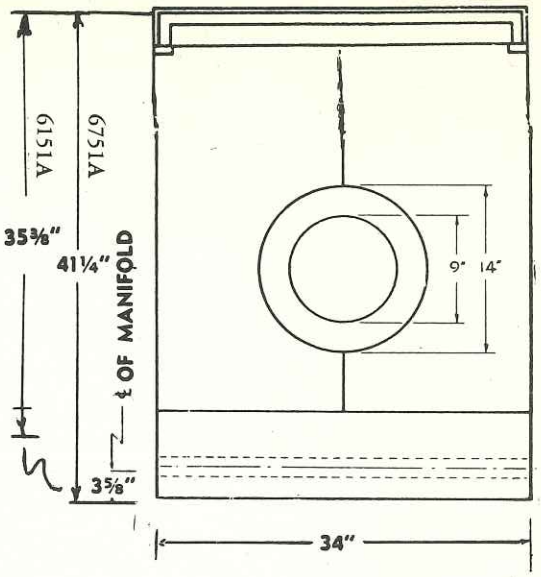

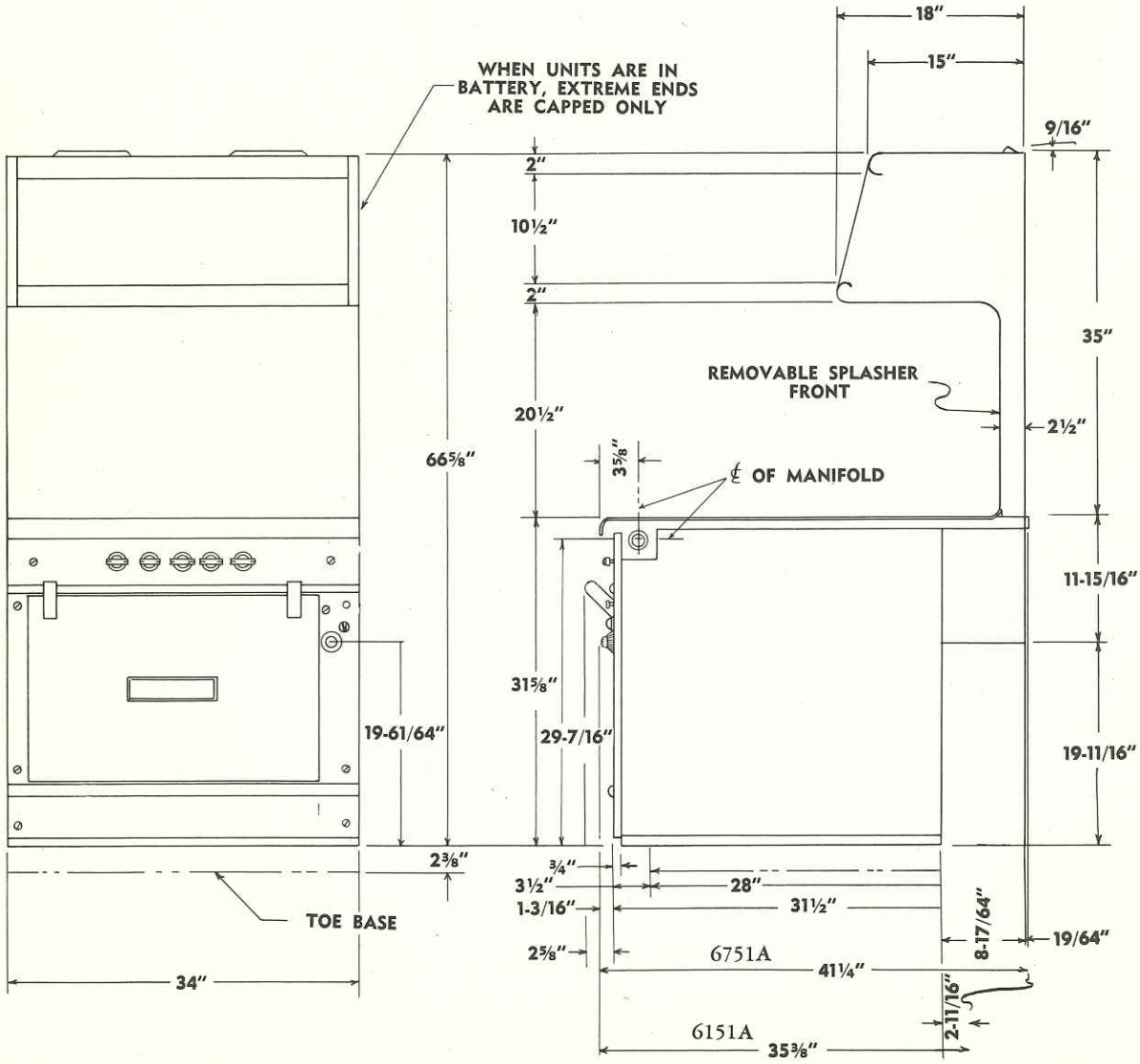

VULCAN-HART MANUFACTURING COMPANY, INCORPORATED

3600 North Point Boulevard
BALTIMORE 22, MARYLAND

Form VH-112

VULCAN
HEAVY DUTY RANGES

Model 6760A ■ 6160A ■
FRY TOP RANGE

VULCAN No. 6760A FRY TOP RANGE WITH No. 6782 DOUBLE DECK HIGH SHELF AND TOE BASE.

VULCAN STERLING STAINLESS STEEL

SPECIFICATIONS

COOKING TOP: Extra large, highly polished, one piece fry plate constructed of chrome-alloy casting with high grease retaining sides and back. Spatula width grease trough along front empties directly into large exposed grease container which is easily removed for cleaning. Equipped with leveling bolts at rear corners. High BTU rating insures maintaining frying temperatures under heavy loads. Four burners controlled by two high-medium-low heavy duty valves. Burner box porcelain enameled and properly insulated. Fry plate can be furnished in nickel-alloy (Ni-Resist). Thermostatic top heat controls can be furnished on this unit.

OVEN: Extra large size general purpose oven for roasting and baking. Heavy duty plated wire oven rack. Porcelain enameled oven linings. Oven completely insulated and has extra thick, positive spring balanced door mounted in self lubricating orlite bronze bearings. Heated by loop-type burner and has special stainless steel alloy oven bottom to insure against burn-out or warpage. Temperature controlled by Robertshaw heavy duty thermostat. 100% safety shut-off pilot light standard equipment.

CONSTRUCTION: Range is strongly built of heavy gauge rust-resisting material, securely fastened together to give years of satisfactory service. Streamlined flush front. May be installed on legs, toe bases, tile base, or directly on the floor. Approved by American Gas Association for installation anywhere, even on non-fireproof floors.

FINISH: Standard finish is a rich finely grained, black wrinkle finish known as Vulcadur, trimmed with chrome. May also be furnished in partial or entire exterior in stainless steel. The Vulcan Sterling Stainless Steel units will be all stainless steel inside and out.

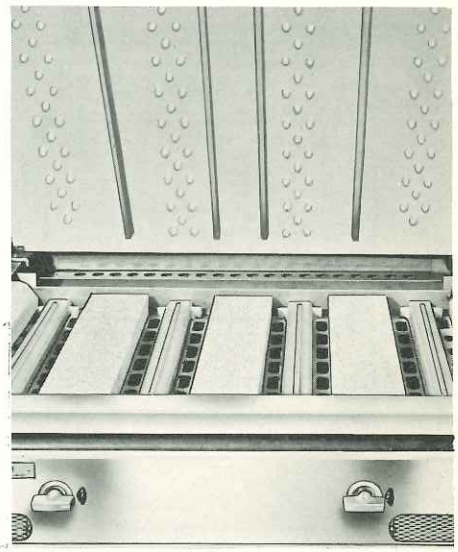

FRY TOP OF No. 6760A & 6160A RANGES

VULCAN • HART MANUFACTURING CO.

Factories and General Offices: BALTIMORE 22, MD. • LOUISVILLE 1, KENTUCKY
Sales Offices and Showrooms: NEW YORK • CHICAGO • LOS ANGELES • SAN FRANCISCO • BOSTON
In Canada: MOFFATS LTD., Weston, Ontario

VULCAN

WORLD'S FINEST COOKING EQUIPMENT

SPECIFICATIONS

FRY-TOP RANGE
With Oven

VULCADUR FINISH	☐ 6160A	☐ 6760A
STERLING STAINLESS STEEL	☐ 16160A	☐ 16760A
Range — Deep	35⅜"	41¼"
Wide	34"	34"
High	31⅝"	31⅝"
High — with toe base or legs	34"	34"
Oven — Wide	26"	26"
Deep	28"	28"
High	14½"	14½"
Burner Ratings in B.T.U.'s per hour —		
Top	80,000	80,000
Oven	45,000	45,000
Gas Manifold	1¼"	1¼"

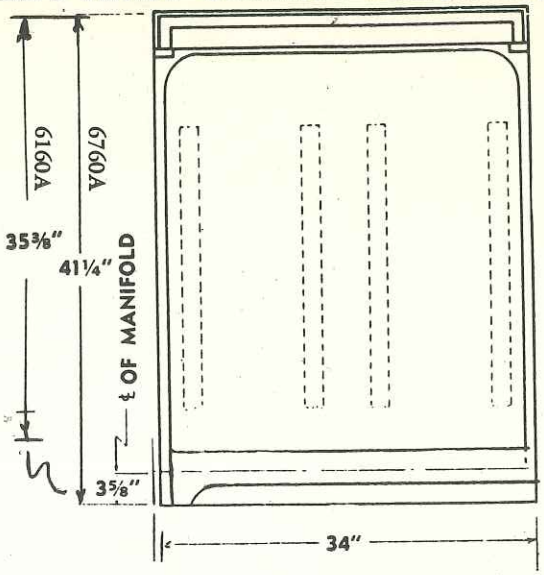

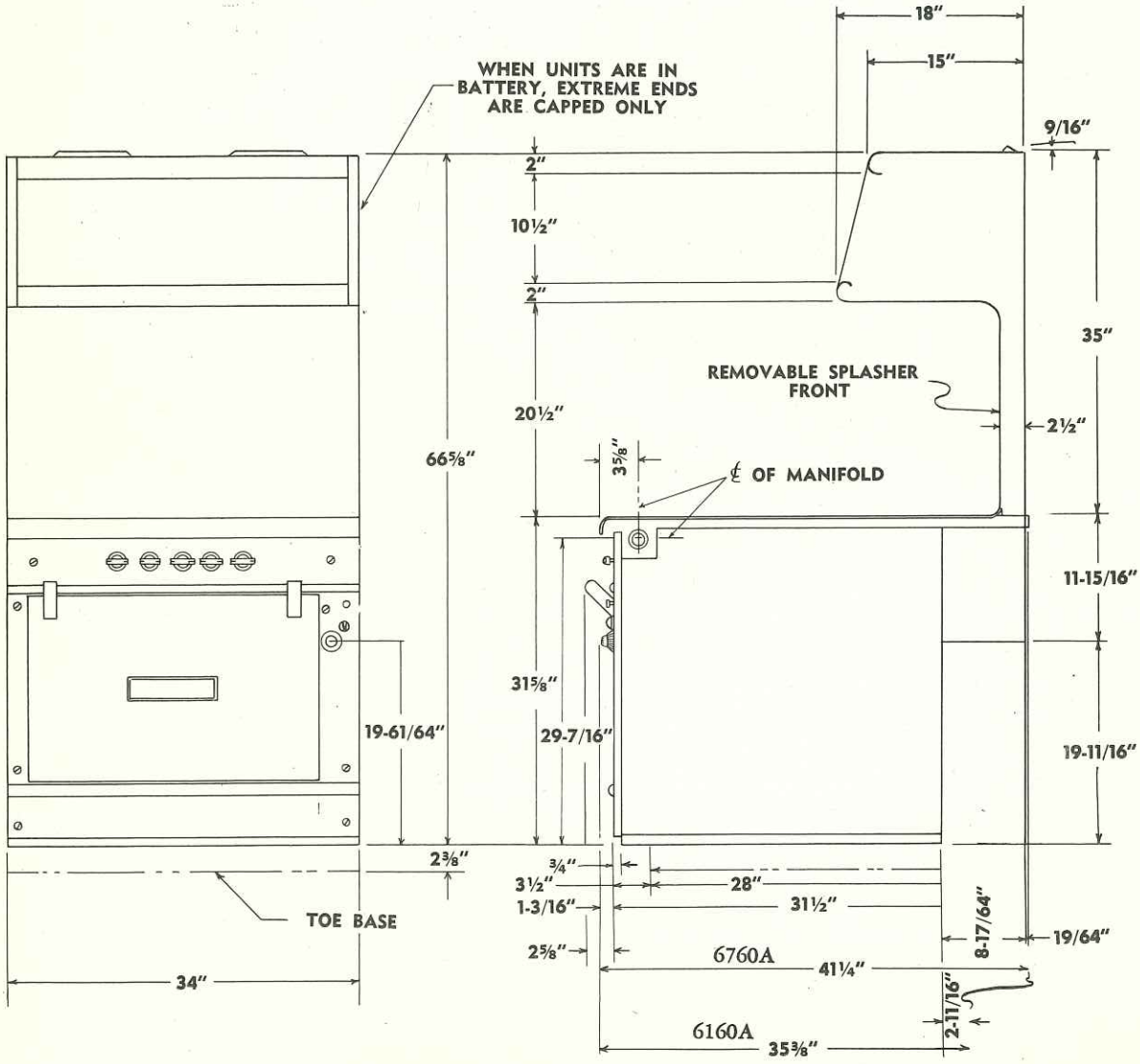

VULCAN-HART MANUFACTURING COMPANY, INCORPORATED

3600 North Point Boulevard
BALTIMORE 22, MARYLAND

VULCAN

HEAVY DUTY RANGES

Model 6772A ■ 6172A ■
EVEN HEAT TOP RANGE

VULCAN No. 6172A EVEN HEAT TOP RANGE WITH No. 6782 DOUBLE DECK HIGH SHELF.

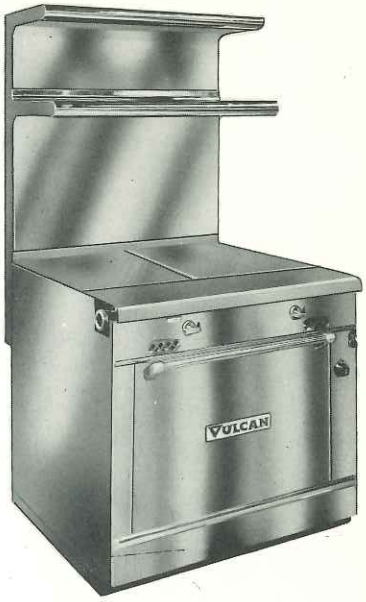

VULCAN STERLING STAINLESS STEEL

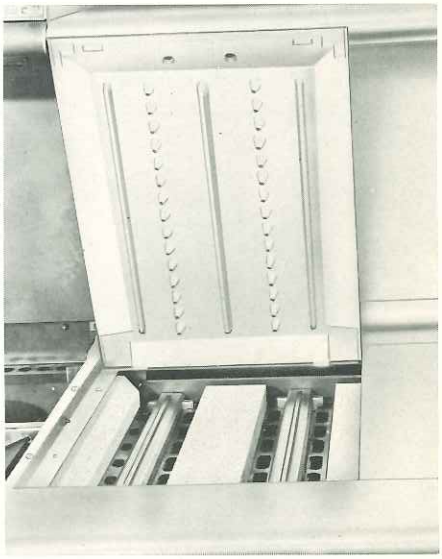

EVEN HEAT TOP OF No. 6772A & 6172A RANGES

SPECIFICATIONS

COOKING TOP: Extra heavy two piece heavy chrome-alloy top with under side reinforcing ribs or flanges on four sides and center. Projections on under side absorb and diffuse heat, giving even temperature under entire plate. Four aerated bar burners, each unit of two controlled by a high-medium-low valve so one or both plates can be heated to different temperatures. Burner box porcelain enameled and properly insulated. Even-Heat Tops can be furnished in nickel-alloy (Ni-Resist).

OVEN: Extra large size general purpose oven for roasting and baking. Heavy duty plated wire oven rack. Porcelain enameled oven linings. Oven completely insulated and has extra thick, positive spring balanced door mounted in self lubricating orlite bronze bearings. Heated by loop-type burner and has special stainless steel alloy oven bottom to insure against burn-out or warpage. Temperature controlled by Robertshaw heavy duty thermostat. 100% safety shut-off pilot light standard equipment.

CONSTRUCTION: Range is strongly built of heavy gauge rust-resisting material, securely fastened together to give years of satisfactory service. Streamlined flush front. May be installed on legs, toe bases, tile base, or directly on the floor. Approved by American Gas Association for installation anywhere, even on non-fireproof floors.

FINISH: Standard finish is a rich finely grained, black wrinkle finish known as Vulcadur, trimmed with chrome. May also be furnished in partial or entire exterior in stainless steel. The Vulcan Sterling Stainless Steel units will be all stainless steel inside and out.

VULCAN • HART MANUFACTURING CO.

Factories and General Offices: BALTIMORE 22, MD. • LOUISVILLE 1, KENTUCKY
Sales Offices and Showrooms: NEW YORK • CHICAGO • LOS ANGELES • SAN FRANCISCO • BOSTON
In Canada: MOFFATS LTD., Weston, Ontario

VULCAN

WORLD'S FINEST COOKING EQUIPMENT

SPECIFICATIONS

EVEN-HEAT TOP RANGE
With Oven

VULCADUR FINISH	☐ 6172A	☐ 6772A
STERLING STAINLESS STEEL	☐ 16172A	☐ 16772A
Range — Deep	35⅜"	41¼"
Wide	34"	34"
High	31⅝"	31⅝"
High — with toe base or legs	34"	34"
Oven — Wide	26"	26"
Deep	28"	28"
High	14½"	14½"
Burner Ratings in B.T.U.'s per hour —		
Top	80,000	80,000
Oven	45,000	45,000
Gas Manifold	1¼"	1¼"

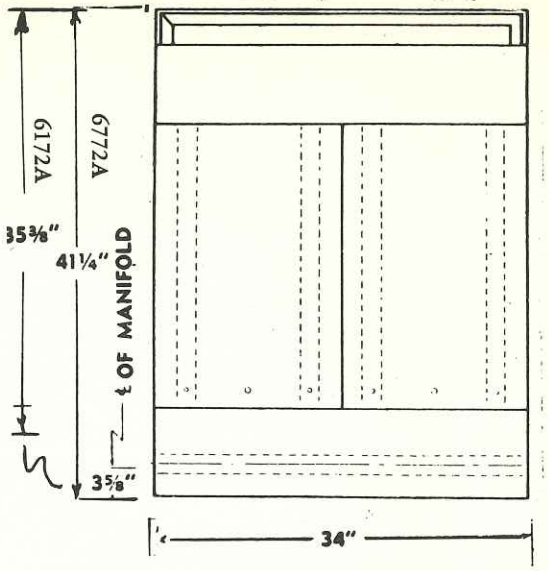

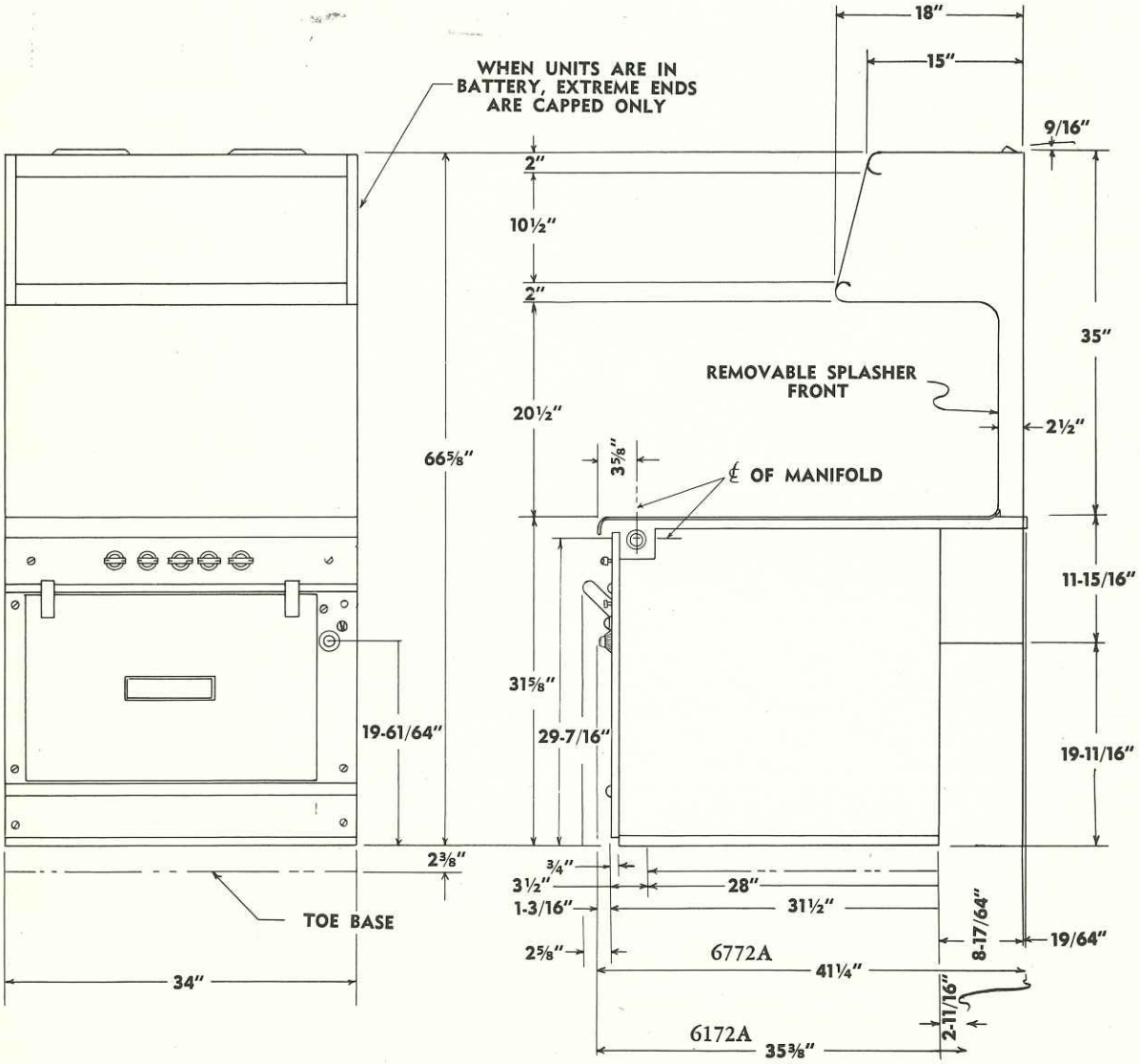

VULCAN-HART MANUFACTURING COMPANY, INCORPORATED

3600 North Point Boulevard
BALTIMORE 22, MARYLAND

VULCAN
DEEP FAT FRYERS

Form VH-148

Model 6794A ■ 6194A ■
Model 6795A ■ 6195A ■
DEEP FAT FRYER

VULCAN NO. 6795A DEEP FAT FRYER WITH 6781DD DOUBLE DECK HIGH SHELF.

VULCAN STERLING STAINLESS STEEL

SPECIFICATIONS

KETTLE: Shall be high-speed modern Vee design without tubes to permit easy cleaning and highest production with least amount of fat. Material to be not less than 14 ga. U. S. Standard polished cold rolled steel. Stainless steel tank is optional. Kettle Vee to have double type stainless steel fins continuously welded to its sides for maximum heat transfer and long life. Kettle sides and flue to be surrounded with heavy insulating bricks to store and save heat for greatest efficiency and low cost operation. Kettle to have front drain valve to accommodate front drainage and supplied with two tie-on strainer bags.

BASKETS: Heavy duty double tinned mesh baskets with extra wide bottoms and extra length to permit greatest capacity frying. Fat strainer for use with breaded foods shall be furnished.

BURNER: One extra heavy burner of double bar type with non-clogging slotted ports for use with all gases without conversion and equipped with extra heavy single venturi. Burner to be lighted by simple pilot burner equipped with non-clogging slotted ports and controlled by separate valves. ¾" pressure regulator shall be furnished with units for manufactured or natural gas.

HEAT CONTROL: Temperatures to be controlled by Robertshaw snap action adjustable control. Electric type control, with indicating light, optional. 100% safety shut-off valve, standard equipment.

VULCAN BLACK VULCADUR

FINISH: Standard finish is a rich finely grained, black wrinkle finish known as Vulcadur, trimmed with chrome. May also be furnished in partial or entire exterior in stainless steel. The Vulcan Sterling Steel units will be all stainless steel inside and out.

VULCAN • HART MANUFACTURING CO.

Factories and General Offices: BALTIMORE 22, MD. • LOUISVILLE 1, KENTUCKY
Sales Offices and Showrooms: NEW YORK • CHICAGO • LOS ANGELES • SAN FRANCISCO • BOSTON
In Canada: MOFFATS LTD., Weston, Ontario

VULCAN

WORLD'S FINEST COOKING EQUIPMENT

SPECIFICATIONS

DEEP FAT FRYER*

BLACK VULCADUR ☐ 6194A ☐ 6794A ☐ 6195A ☐ 6795A

STERLING STAINLESS ☐ 16194A ☐ 16794A ☐ 16195A ☐ 16795A

Overall Dimensions				
Wide	17"	17"	25½"	25½"
Deep	35⅜"	41¼"	35⅜"	41¼"
High	31⅝"	31⅝"	31⅝"	31⅝"
High on Toe Base	34"	34"	34"	34"
Fry Tank Opening				
Wide	13"	13"	18"	18"
Long	16"	16"	18"	18"
Fat Capacity	28 lbs	28 lbs	45 lbs	45 lbs
B.T.U. Rating	65000	65000	75000	75000
Gas Manifold	1¼"	1¼"	1¼"	1¼"
Flue Collar (optional)	6"	6"	10"	10"
Shipping Wt.	225 lbs	225 lbs	300 lbs	300 lbs

*Furnished with Robertshaw CTS Heat Control
*ADD Suffix "E" if Robertshaw EA1 Electric Heat Control, with indicator light is desired. (110/115 AC)

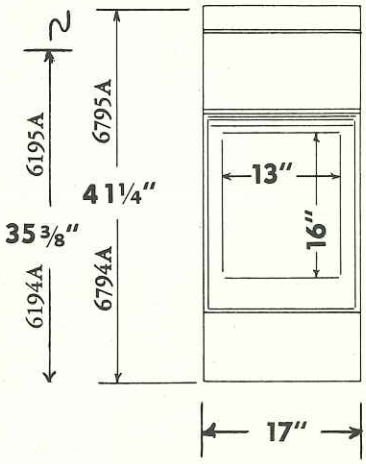

6794

TOP VIEW

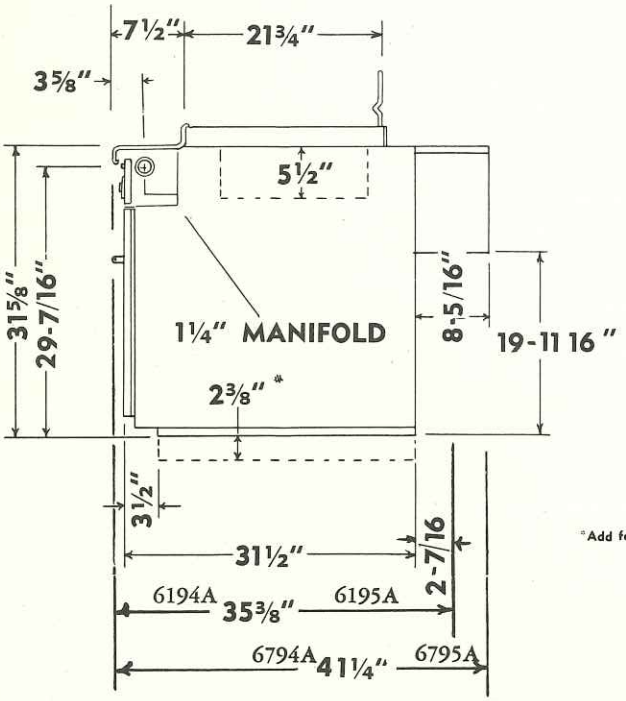

*Add for toe base

SIDE VIEW

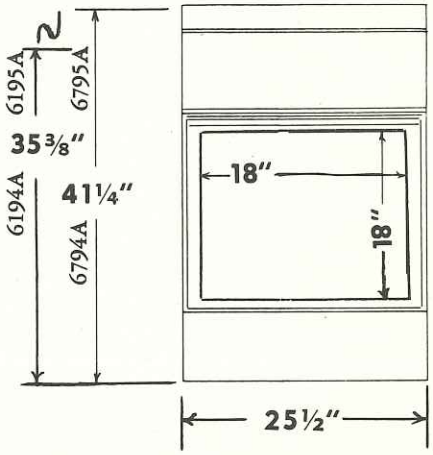

6795

TOP VIEW

VULCAN-HART MANUFACTURING COMPANY, INCORPORATED

3600 North Point Boulevard
BALTIMORE 22, MARYLAND

VULCAN
EXPANDO UNITS

Model 645 ■ 345 ■
Model 660 ■ 360 ■
Model 672 ■ 372 ■
EXPANDO UNITS

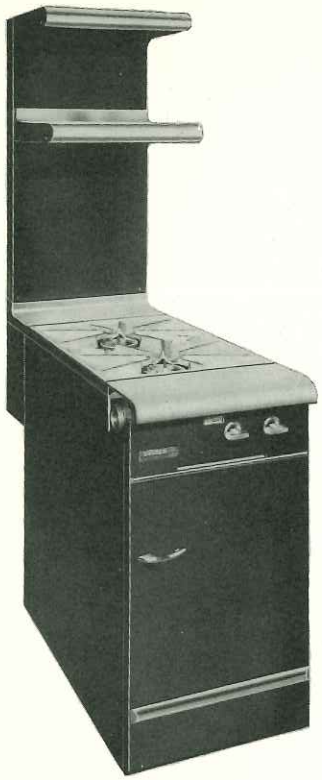

VULCAN 645 OPEN BURNER EXPANDO UNIT WITH 6780 DD DOUBLE DECK HIGH SHELF AND TOE BASE.

VULCAN 660 FRY TOP EXPANDO UNIT WITH 6780 DD DOUBLE DECK HIGH SHELF AND TOE BASE.

1672 EVEN HEAT TOP EXPANDO UNIT IN STERLING STAINLESS STEEL

SPECIFICATIONS

COOKING TOPS: 645 or 345 OPEN BURNER TOP: Two giant circular non-clog burners equipped with flash-type lighting. Has spill over tray. Burner box porcelain enameled.

660 or 360 FRY TOP EXPANDO: 17" wide polished chrome alloy griddle plate heated by two bar burners. Raised edges at sides and back with spatula width trough in front emptying into suitable grease container. Plate can be furnished in Ni-resist.

672 or 372 EVEN HEAT TOP: 17" wide polished chrome alloy panel heated by two bar burners. Designed to give even heat distribution over entire top. Can be furnished in Ni-resist.

STORAGE COMPARTMENT: Beneath cooking top is a storage compartment having a full width swinging door mounted on concealed hinges. These expando units match in harmony with other 6700-6100 equipment.

CONSTRUCTION: Range is strongly built of heavy gauge rust-resisting material, securely fastened together to give years of satisfactory service. Streamlined flush front. May be installed on legs, toe bases, tile base, or directly on the floor. Approved by American Gas Association for installation anywhere, even on non-fireproof floors.

FINISH: Standard finish is a rich finely grained, black wrinkle finish known as Vulcadur, trimmed with chrome. May also be furnished in partial or entire exterior in stainless steel. The Vulcan Sterling Stainless Steel units will be all stainless steel inside and out.

1660 FRY TOP UNITS IN STERLING STAINLESS STEEL

VULCAN • HART MANUFACTURING CO.

Factories and General Offices: BALTIMORE 22, MD. • LOUISVILLE 1, KENTUCKY
Sales Offices and Showrooms: NEW YORK • CHICAGO • LOS ANGELES • SAN FRANCISCO • BOSTON
In Canada: MOFFATS LTD., Weston, Ontario

WORLD'S FINEST COOKING EQUIPMENT

SPECIFICATIONS

17″ EXPANDO UNITS

VULCADUR FINISH*	Deep	Wide	High**	B.T.U.
645 Open Burner Top	41¼″	17″	31⅝″	30,000
660 Fry Top	41¼″	17″	31⅝″	40,000
672 Even Heat Top	41¼″	17″	31⅝″	40,000
345 Open Burner Top	35⅜″	17″	31⅝″	30,000
360 Fry Top	35⅜″	17″	31⅝″	40,000
372 Even Heat Top	35⅜″	17″	31⅝″	40,000

*For STERLING STAINLESS STEEL add prefix "1"

**Add 2⅜″ if on toe base

Gas manifold on all models—1¼″

Fits in battery with other heavy duty equipment.

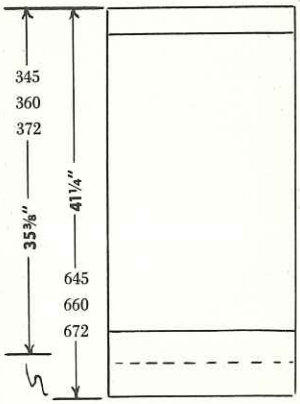

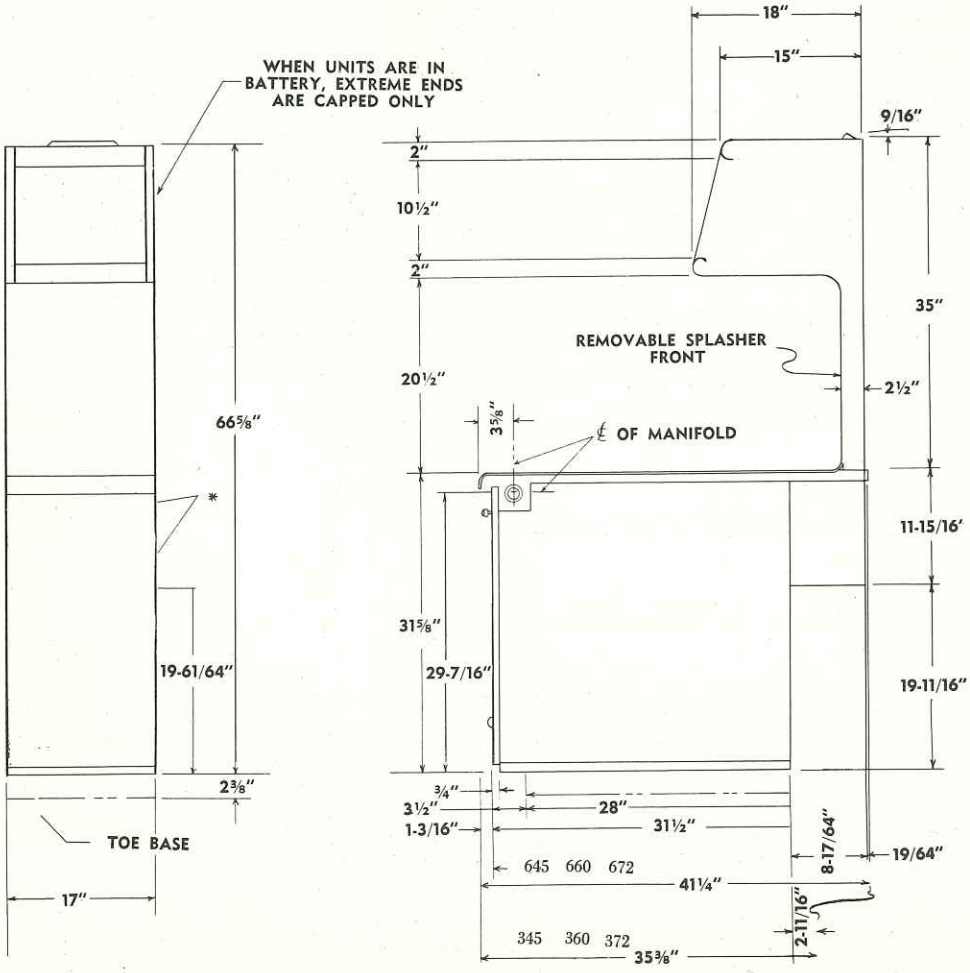

VULCAN-HART MANUFACTURING COMPANY, INCORPORATED

3600 North Point Boulevard

BALTIMORE 22, MARYLAND

Form VH-154

VULCAN
SPREADER PLATES

Model 608 ■ 617 ■ 634 ■
Model 308 ■ 317 ■ 334 ■
SPREADER PLATES

E" SERIES SPREADER FURNISHED WITH COMPLETE BODY AND DOORS

VULCAN No. 1634D SPREADER PLATE WITH DOUBLE DOORS

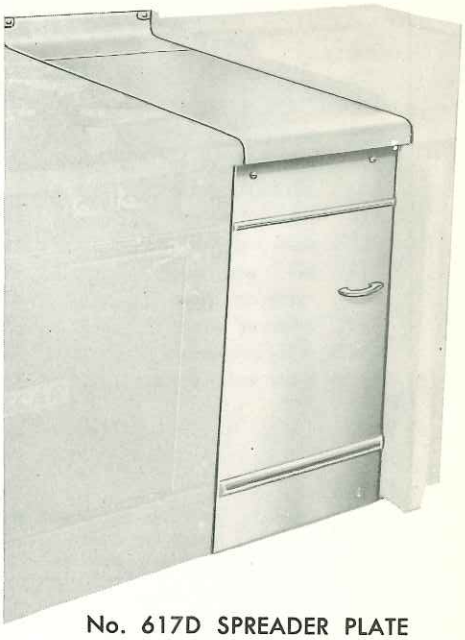

No. 617D SPREADER PLATE WITH DOOR

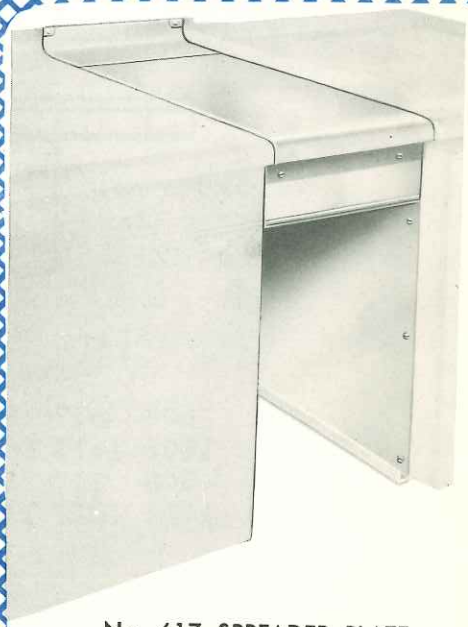

No. 617 SPREADER PLATE WITHOUT DOOR

SPECIFICATIONS

GENERAL: Provide working surface between ranges. When more equipment is needed later, a new range can be installed in place of spreader plate without disturbing balance of installation.

Flush front to harmonize with rest of battery. Furnished with or without front door. Manifold furnished so gas manifold of battery can be continuous.

STORAGE COMPARTMENT: Spreader plate with door provides an extra large size storage compartment for storing pots and pans.

DOORS: Spreader plates are available with flush mounted doors (Double doors on large unit) that conceal storage compartment.

CONSTRUCTION: Spreader plates are strongly built of heavy polished steel to give years of satisfactory service. Streamlined flush front.

FINISH: Doors and side on end units are finished in a rich finely grained, black wrinkle finish known as Vulcadur, trimmed with chrome. May also be furnished in stainless steel.

VULCAN • HART MANUFACTURING CO.

Factories and General Offices: BALTIMORE 22, MD. • LOUISVILLE 1, KENTUCKY
Sales Offices and Showrooms: NEW YORK • CHICAGO • LOS ANGELES • SAN FRANCISCO • BOSTON
In Canada: MOFFATS LTD., Weston, Ontario

WORLD'S FINEST COOKING EQUIPMENT

SPECIFICATIONS

SPREADER PLATES

VULCADUR FINISH*	Deep	Wide	High**
608 without door	41¼"	8½"	31⅝"
308 without door	35⅜"	8½"	31⅝"
617 without door	41¼"	17"	31⅝"
317 without door	35⅜"	17"	31⅝"
617D with one door	41¼"	17"	31⅝"
317D with one door	35⅜"	17"	31⅝"
634 without door	41¼"	34"	31⅝"
334 without door	35⅜"	34"	31⅝"
634D with two doors	41¼"	34"	31⅝"
334D with one door	35⅜"	34"	31⅝"
E617	41¼"	17"	31⅝"
E371	35⅜"	17"	31⅝"
E634	41¼"	34"	31⅝"
E334	35⅜"	34"	31⅝"

*For Sterling Stainless Steel add prefix "1"
**Add 2⅜" if on toe base
Gas manifold on all models—1¼"

'E' SERIES WITH COMPLETE BODY AND DOOR(S).

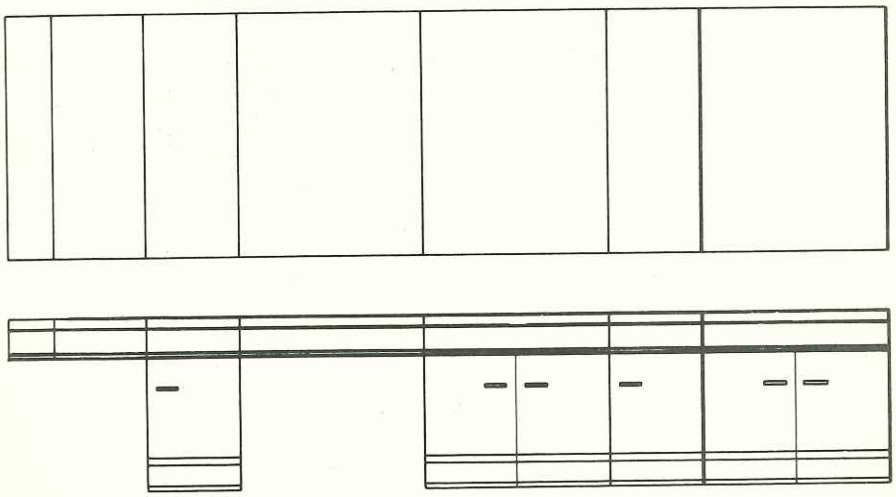

8-1/2"	17"	17" with door	34"	34" with doors	17"	34"
608	617	617D	634	634D	E617	E634
1608	1617	1617D	1634	1634D	E1617	E1634
308	317	317D	334	334D	E317	E334
1308	1317	1317D	1334	1334D	E1317	E1334

VULCAN-HART MANUFACTURING COMPANY, INCORPORATED
3600 North Point Boulevard
BALTIMORE 22, MARYLAND

VULCAN

HIGH SHELVES AND BACK GUARDS

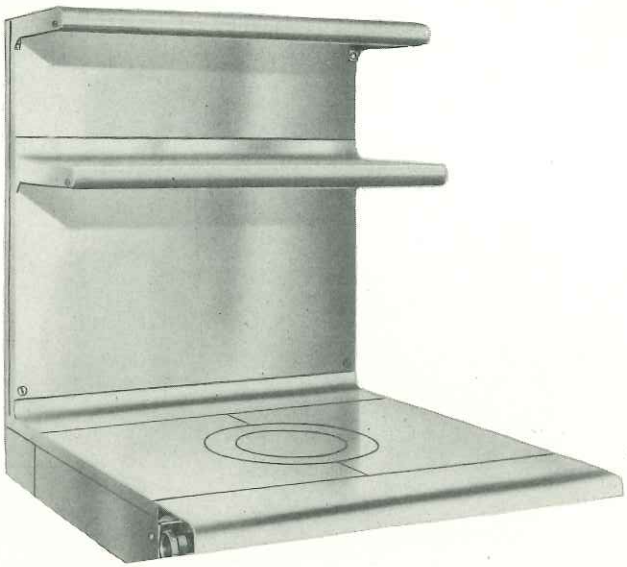

VULCAN No. 6782DD DOUBLE DECK HIGH SHELF.

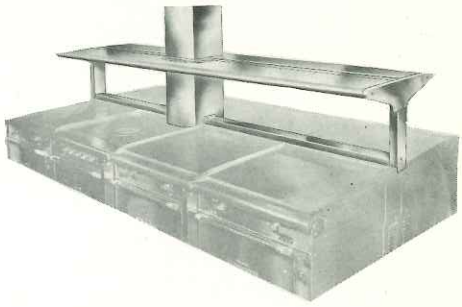

DUPLEX HIGH SHELF

SPECIFICATIONS

GENERAL: High shelves can be furnished for any Range, Expando Unit or Fryer, or combinations of them. Standard sizes are shown on this page. Special shelves can be made up. Shelves are extra large and deep, with high clearance (20½") over range top. Always send sketch showing how ranges and attachments will be set. High shelves can easily be removed or installed without moving bottom of range. Has removable back splash. Units have heavy cast iron support brackets to prevent forward tilt. Units in black Vulcadur have easy to clean Apollo steel shelves.

CONSTRUCTION: High shelves are strongly built of heavy gauge rust-resisting material, securely fastened together to give years of satisfactory service.

FINISH: Standard finish is a rich finely grained, black wrinkle finish known as Vulcadur, with chrome shelves. May also be furnished in partial or entire exterior in stainless steel. The Vulcan Sterling Stainless Steel units will be all stainless steel inside and out.

No. 6782BG BACK GUARD

VULCAN • HART MANUFACTURING CO.

Factories and General Offices: BALTIMORE 22, MD. • LOUISVILLE 1, KENTUCKY
Sales Offices and Showrooms: NEW YORK • CHICAGO • LOS ANGELES • SAN FRANCISCO • BOSTON
In Canada: MOFFATS LTD., Weston, Ontario

Form VH-152

VULCAN

WORLD'S FINEST COOKING EQUIPMENT

SPECIFICATIONS
HIGH SHELVES

(FOR BOTH 41¼" AND 33⅜" EQUIPMENT)

Single Deck	Wide	Double Deck	Wide	Duplex	Wide	17" Backguard	Wide
6780SD	17"	6780DD	17"	6780DU	17"	6780BG	17"
6781SD	25½"	6781DD	25½"	6781DU	25½"	6781BG	25½"
6782SD	34"	6782DD	34"	6782DU	34"	6782BG	34"
6783SD	42½"	6783DD	42½"	6783DU	42½"	6783BG	42½"
6784SD	51"	6784DD	51"	6784DU	51"	6784BG	51"
6785SD	59½"	6785DD	59½"	6785DU	59½"	6785BG	59½"
6786SD	68"	6786DD	68"	6786DU	68"	6786BG	68"

ADD suffix "1" to denote Sterling Stainless Steel

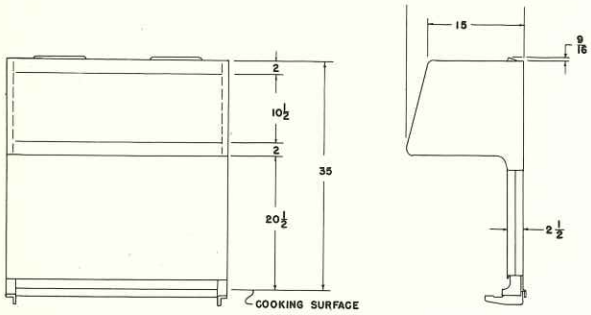

Double Deck High Shelf

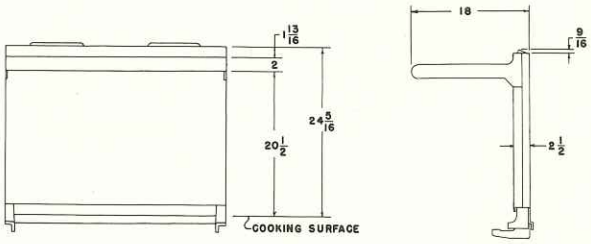

Single Deck High Shelf

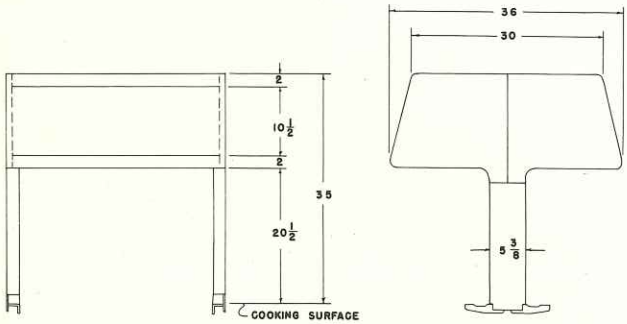

Duplex High Shelf

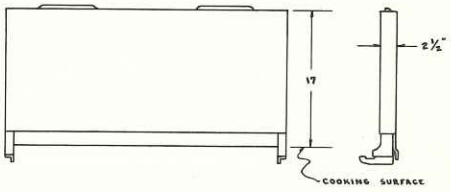

Backguard

VULCAN-HART MANUFACTURING COMPANY, INCORPORATED

3600 North Point Boulevard
BALTIMORE 22, MARYLAND

VULCAN
BROILER-GRIDDLE

Model 365 ■ 665 ■
Model 1365 ■ 1665 ■
BROILER-GRIDDLE

VULCAN No. 665 BROILER-GRIDDLE.

VULCAN STERLING STAINLESS STEEL

SPECIFICATIONS

BROILER: New high-speed burners with ceramic radiants speed up service and give appetizing color to food. Broiler grid of extra large capacity moves on roller bearings and is adjustable to six levels. Drip pan is conveniently located beneath grid and is accessible through compartment door.

GRIDDLE: Large capacity, highly polished chrome alloy griddle plate located above broiler has raised edges at sides and back to contain grease. Spatula width trough across front empties into exposed grease receptacle. Available in Niresist.

CONSTRUCTION: Range is strongly built of heavy gauge rust-resisting material, securely fastened together to give years of satisfactory service. Streamlined flush front. May be installed on legs, toe bases, tile base, or directly on the floor. Approved by American Gas Association for installation anywhere, even on non-fireproof floors.

FINISH: Standard finish is a rich finely grained, black wrinkle finish known as Vulcadur, trimmed with chrome. May also be furnished in partial or entire exterior in stainless steel. The Vulcan Sterling Steel units will be all stainless steel inside and out.

VULCAN BROILER-GRIDDLE WITHOUT HIGH SHELF

VULCAN • HART MANUFACTURING CO.

Factories and General Offices: BALTIMORE 22, MD. • LOUISVILLE 1, KENTUCKY
Sales Offices and Showrooms: NEW YORK • CHICAGO • LOS ANGELES • SAN FRANCISCO • BOSTON
In Canada: MOFFATS LTD., Weston, Ontario

VULCAN

WORLD'S FINEST COOKING EQUIPMENT

SPECIFICATIONS

BROILER GRIDDLE

VULCADUR FINISH	☐ 365	☐ 665
STERLING STAINLESS STEEL	☐ 1365	☐ 1665
Deep	35⅜"	41¼"
Wide	25½"	25½"
High	31⅝"	31⅝"
High—with toe base or legs	34"	34"
Burner Ratings in B.T.U.'s per hour—		
Top	45,000	45,000
Gas Manifold	1¼"	1¼"

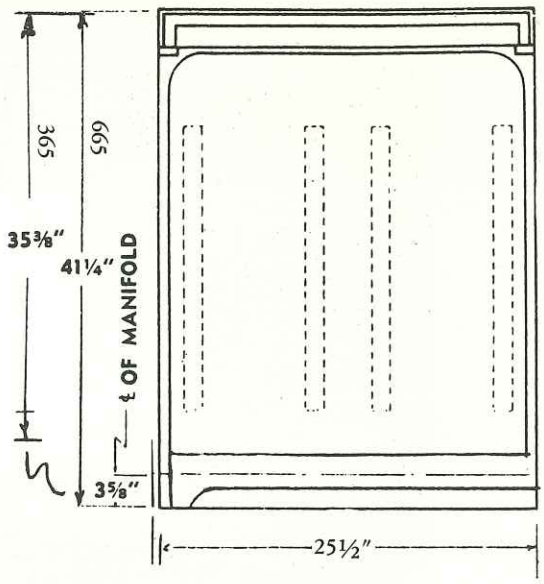

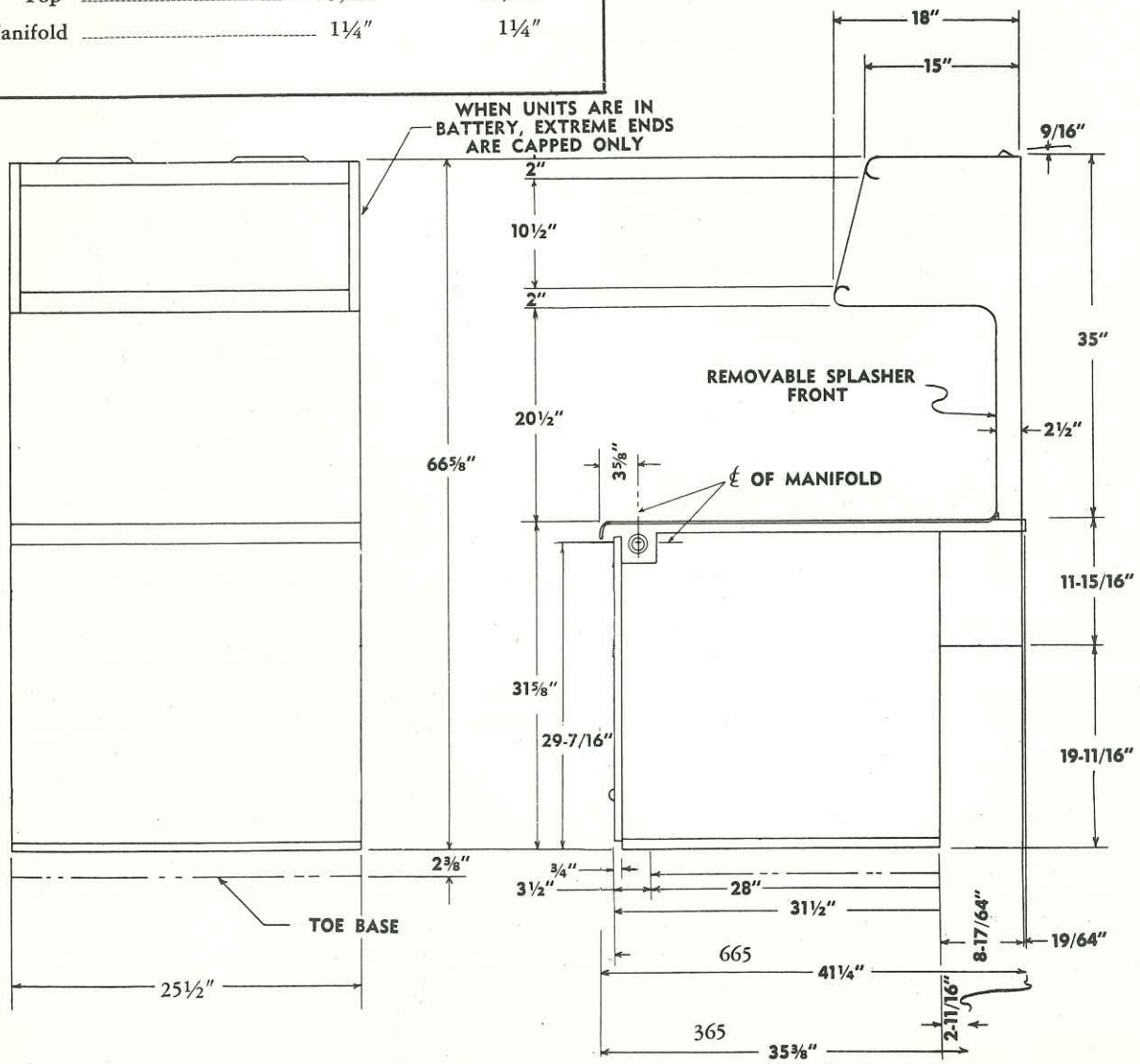

VULCAN-HART MANUFACTURING COMPANY, INCORPORATED

3600 North Point Boulevard
BALTIMORE 22, MARYLAND

Form VH-151

VULCAN
CERAMIC BROILER

Model 6744
CERAMIC BROILER

VULCAN NO. 6744
CERAMIC BROILER

VULCAN STERLING
STAINLESS STEEL

SPECIFICATIONS

GENERAL: Body is substantially constructed of heavy sheet steel of not less than 18 gauge, securely bolted and reinforced with heavy welded angle iron frame.
Easily accessible leveling bolts are furnished to allow for leveling of unit frame front, without use of shims.
BROILER SECTION: Broiler compartment is thickly insulated with best grade insulation encased in sheet metal housings. Unit is heated by four heavy ferrous alloy burners separated by removable ceramics placed front to back between the burners and on the two sides forming a complete radiant broiling area over the entire broiler grid section. Two high-medium-low valves. Broiler is of smokeless type so designed that all grease and vapors are consumed by broiler radiants, eliminating excessive smoke from front of broiler and out of flue. Broiler grid is of extra large capacity, measuring 26″ wide x 27½″ deep, having not less than 700 sq. in. of broiling area; constructed of welded angle iron frame and extra heavy grid bars. Grid held in angle iron guide rails and operated in ball-bearing rollers. Broiler grid raising and lowering device has an infinite position, sealed ball bearing geared mechanism controlled by crank, nonbinding.

FINISHING OR AU GRATIN OVEN: A finishing or augratin oven is located above the broiling compartment; measures 26″ wide x 28″ deep and not less than 10″ high; is heated by broiler burners below. Oven bottom made of heavy reinforced vitreous enameled steel with edges flanged to prevent spillovers.
Interior sides and back are vitreous enameled.
Oven door is lift type, heavily reinforced and insulated, with counterbalanced weight instead of springs.
Unit is approved by American Gas Association.

FINISH: Standard finish is a rich finely grained, black wrinkle finish known as Vulcadur, trimmed with chrome. Upper front frame is vitreous enameled, may also be furnished in partial or entire exterior in stainless steel. The Vulcan Sterling Stainless Steel units will be all stainless steel inside and out.

FEATURES

- LARGE GREASE RESERVOIR
- COUNTER-BALANCED OVEN DOOR
- POSITIVE RAISING AND LOWERING DEVICE
- NICKEL PLATED OVEN RACK
- ENAMELED UPPER FRAME
- STURDY BROILER GRID
- SMOKELESS DESIGN
- EASY TO CLEAN

VULCAN • HART MANUFACTURING CO.

Factories and General Offices: BALTIMORE 22, MD. • LOUISVILLE 1, KENTUCKY
Sales Offices and Showrooms: NEW YORK • CHICAGO • LOS ANGELES • SAN FRANCISCO • BOSTON
In Canada: MOFFATS LTD., Weston, Ontario

VULCAN

WORLD'S FINEST COOKING EQUIPMENT

UNIT WILL BATTERY WITH 35⅜" OR 41¼"
DEEP EQUIPMENT

SPECIFICATIONS

CERAMIC BROILER

BLACK VULCADUR	☐ 6744
STERLING STAINLESS	☐ 16744
Overall Dimensions	
Wide	34"
Deep	41¼
High	68¼
Broiler Grid	70⅝
Wide	26"
Deep	27½
Oven Compartment	
Wide	26"
Deep	28"
High	10"
B.T.U. Rating	80,000
Gas Manifold	1¼
Flue Collar (optional)	10"
Shipping Wt.	725 lbs.

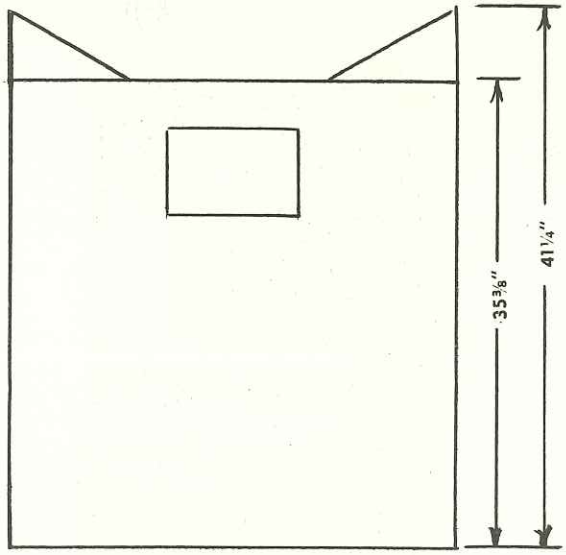

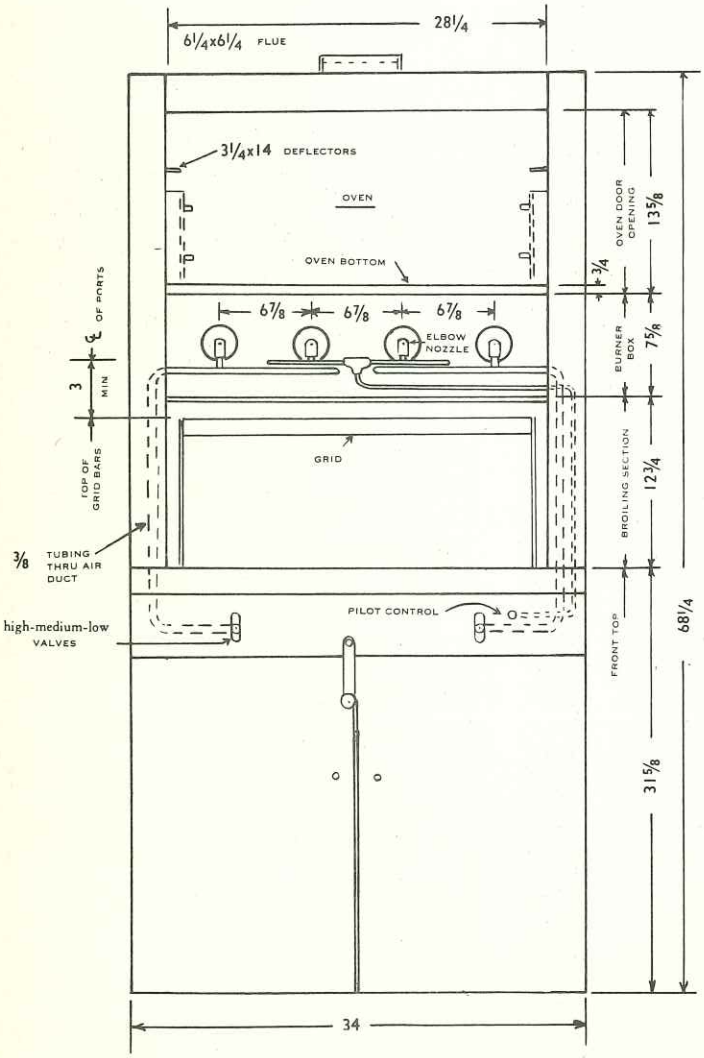

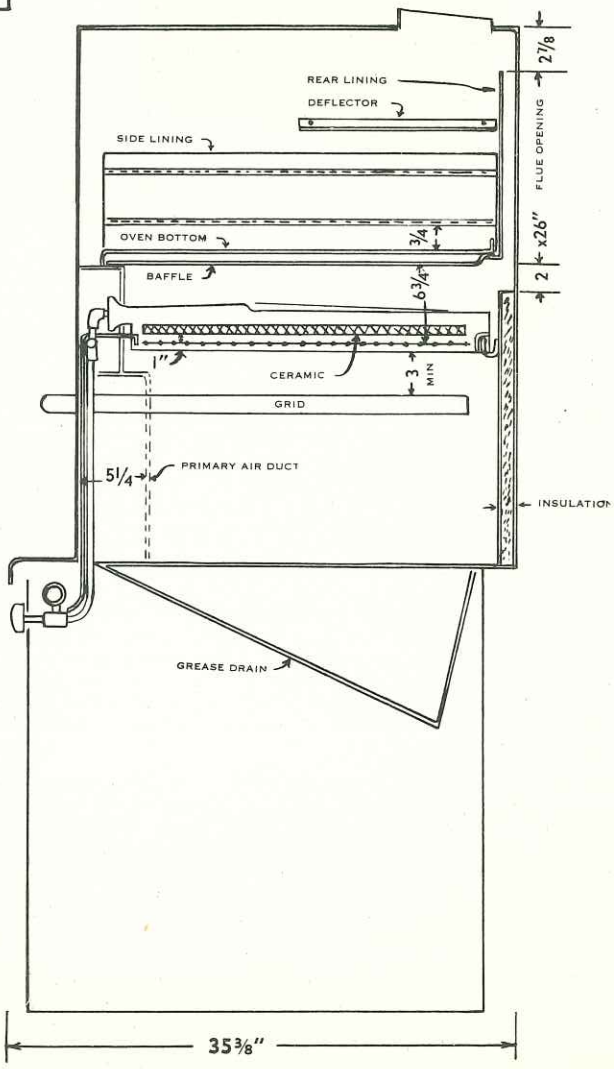

VULCAN-HART MANUFACTURING COMPANY, INCORPORATED

3600 North Point Boulevard
BALTIMORE 22, MARYLAND

VULCAN
OPEN HEARTH BROILER

Form VH-1-52

Model 661 ■ 1661 ■
Model 361 ■ 1361 ■
OPEN HEARTH BROILER

VULCAN No. 1661
OPEN HEARTH BROILER

VULCAN STERLING
STAINLESS STEEL

SPECIFICATIONS

COOKING TOP: Designed for high speed broiling on top grid and slower speed broiling on the lower grid. Unit has three cast iron burners, ball bearing mounted top grid rolls forward for loading and unloading; ceramic radiants assure uniform broiling; heavy duty lower grid; slide out grease tray, Broiler will battery with any VULCAN heavy duty equipment. Available with or without high shelf or with 17″ back guard.

STORAGE COMPARTMENT: Broiler is provided with extra large size storage compartment for storing pots and pans.

CONSTRUCTION: Broiler is strongly built of heavy gauge rust-resisting material, securely fastened together to give years of satisfactory service. Streamlined flush front. May be installed on legs, toe bases, tile base, or directly on the floor.

FINISH: Standard finish is a rich finely grained, black wrinkle finish known as Vulcadur, trimmed with chrome. May also be furnished in partial or entire exterior in stainless steel. The Vulcan Sterling Stainless Steel units will be all stainless steel inside and out.

VULCAN

Smarter Design

Greater Flexibility

More Value

VULCAN•HART MANUFACTURING CO.

Factories and General Offices: BALTIMORE 22, MD. • LOUISVILLE 1, KENTUCKY
Sales Offices and Showrooms: NEW YORK • CHICAGO • LOS ANGELES • SAN FRANCISCO • BOSTON
In Canada: MOFFATS LTD., Weston, Ontario

WORLD'S FINEST COOKING EQUIPMENT

SPECIFICATIONS

OPEN HEARTH BROILER

Model No. (Vulcadur Finish)	☐ 361	☐ 661
Model No. (Stainless Steel)	☐ 1361	☐ 1661
Overall Height (with high shelf)	66⅝"	66⅝"
Overall Depth	35"	41¼"
No. of Burners	3	3
B.T.U. each burner	33,000	33,000
Total B.TU.	99,000	99,000
Shipping Weight (with high shelf)	400 lbs.	430 lbs.

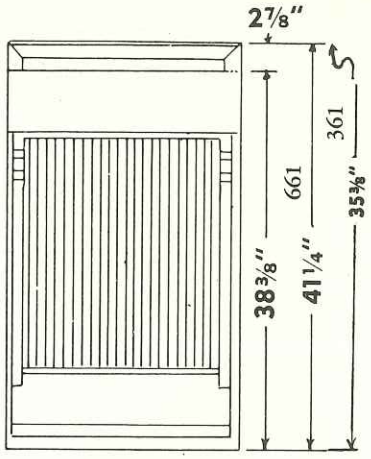

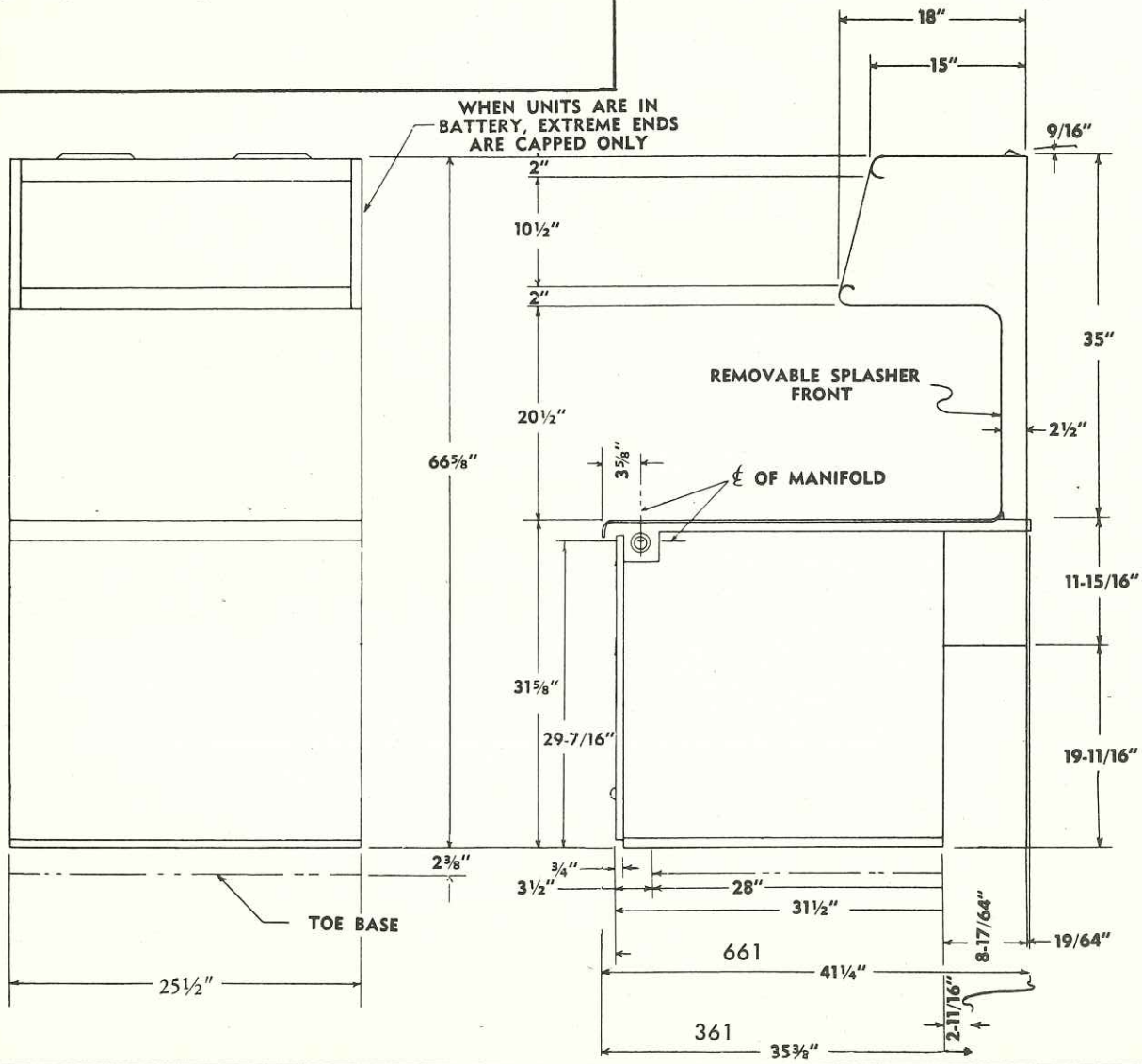

VULCAN-HART MANUFACTURING COMPANY, INCORPORATED

3600 North Point Boulevard

BALTIMORE 22, MARYLAND

VULCAN
OPEN HEARTH BROILER

Form VH-139

Model 661 ■ 1661 ■
Model 361 ■ 1361 ■
OPEN HEARTH BROILER

VULCAN No. 1661
OPEN HEARTH BROILER

VULCAN STERLING
STAINLESS STEEL

SPECIFICATIONS

COOKING TOP: Designed for high speed broiling on top grid and slower speed broiling on the lower grid. Unit has three cast iron burners, ball bearing mounted top grid rolls forward for loading and unloading; ceramic radiants assure uniform broiling; heavy duty lower grid; slide out grease tray. Broiler will battery with any VULCAN heavy duty equipment. Available with or without high shelf or with 17″ back guard.

STORAGE COMPARTMENT: Broiler is provided with extra large size storage compartment for storing pots and pans.

CONSTRUCTION: Broiler is strongly built of heavy gauge rust-resisting material, securely fastened together to give years of satisfactory service. Streamlined flush front. May be installed on legs, toe bases, tile base, or directly on the floor.

FINISH: Standard finish is a rich finely grained, black wrinkle finish known as Vulcadur, trimmed with chrome. May also be furnished in partial or entire exterior in stainless steel. The Vulcan Sterling Stainless Steel units will be all stainless steel inside and out.

VULCAN

Smarter Design

Greater Flexibility

More Value

VULCAN•HART MANUFACTURING CO.

Factories and General Offices: BALTIMORE 22, MD. • LOUISVILLE 1, KENTUCKY
Sales Offices and Showrooms: NEW YORK • CHICAGO • LOS ANGELES • SAN FRANCISCO • BOSTON
In Canada: MOFFATS LTD., Weston, Ontario

VULCAN

WORLD'S FINEST COOKING EQUIPMENT

SPECIFICATIONS

OPEN HEARTH BROILER

Model No. (Vulcadur Finish)	☐ 361	☐ 661
Model No. (Stainless Steel)	☐ 1361	☐ 1661
Overall Height (with high shelf)	66⅝"	66⅝"
Overall Depth	35"	41¼"
No. of Burners	3	3
B.T.U. each burner	33,000	33,000
Total B.TU.	99,000	99,000
Shipping Weight (with high shelf)	400 lbs.	430 lbs.

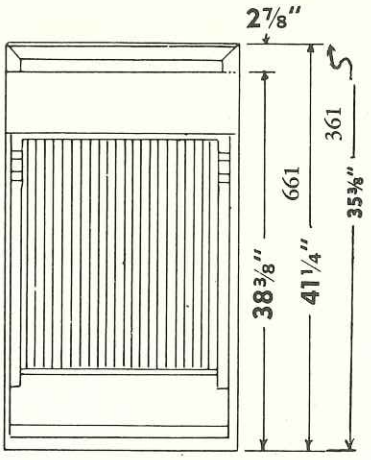

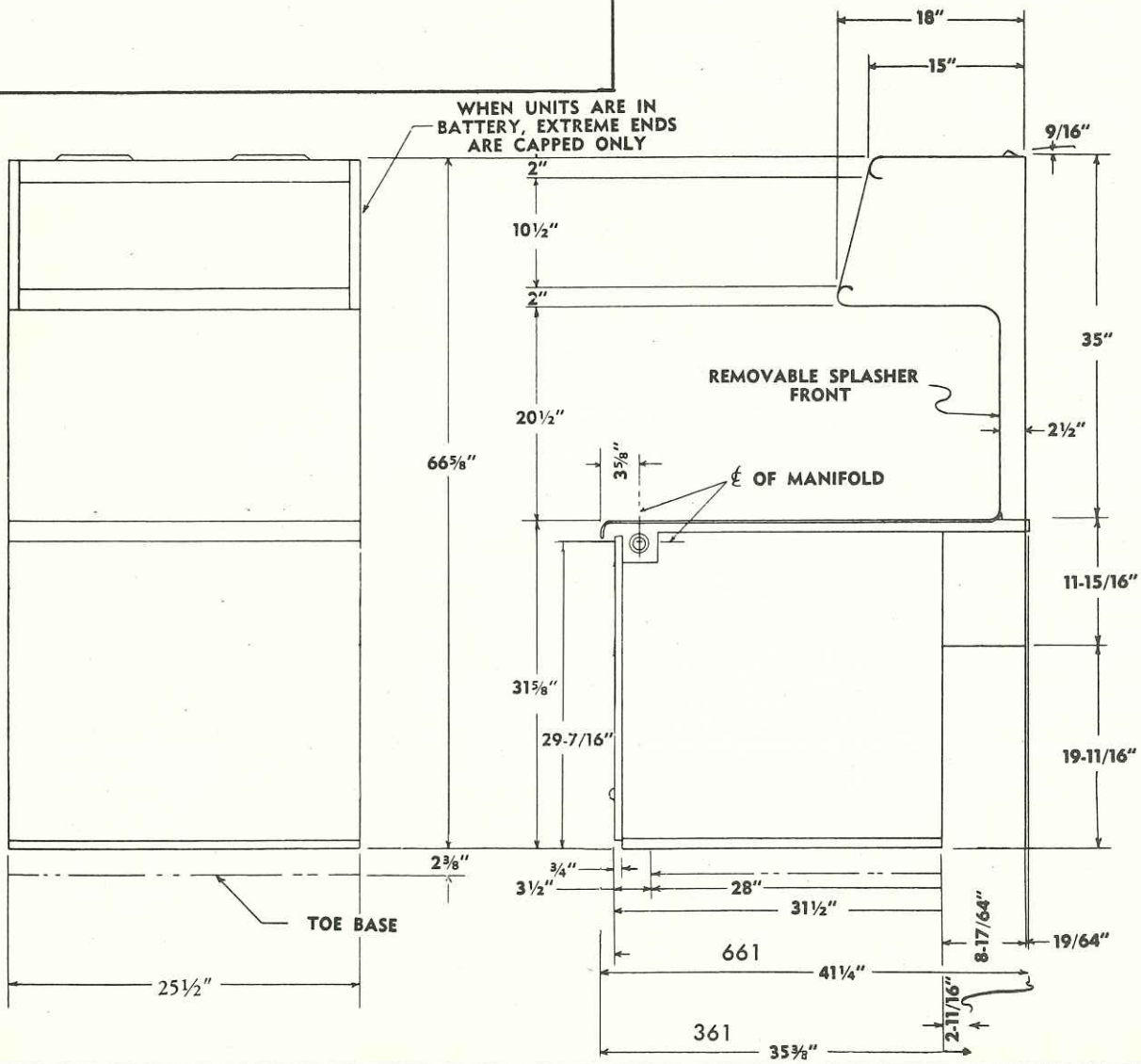

VULCAN-HART MANUFACTURING COMPANY, INCORPORATED

3600 North Point Boulevard
BALTIMORE 22, MARYLAND

Form VH-1-5

VULCAN
ELEVATED CERAMIC BROILER

Model ■ 6708
ELEVATED CERAMIC BROILER

VULCAN NO. 6708
ELEVATED CERAMIC BROILER

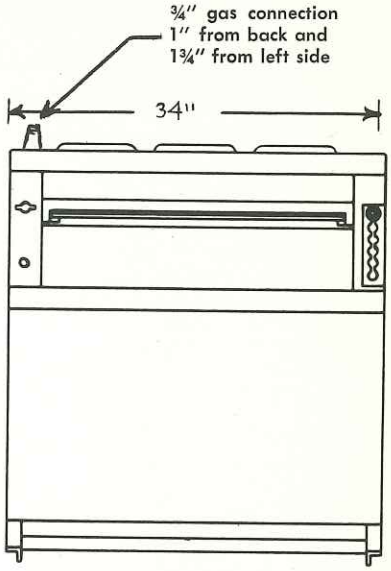

MODEL 6708
FRONT VIEW

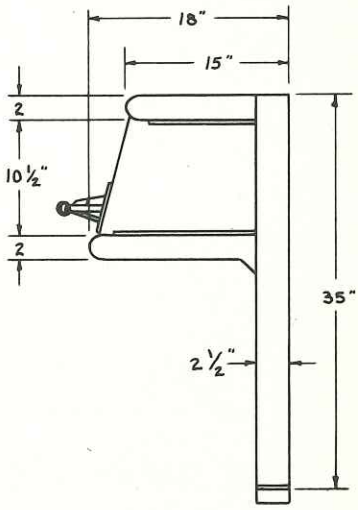

MODEL 6708
SIDE VIEW

SPECIFICATIONS

GENERAL: This Vulcan Broiler is new in both design and operation. In appearance they match other Vulcan heavy duty equipment.

They are equipped with the new gas heated ceramics with balanced heat that give superior broiling results. Rays from the ceramics penetrate and broil the food quickly, while the rays from gas heat flame sear the meat and give it that rich brown color required by exacting patrons.

Unit has concealed raising and lowering mechanism. It is easily serviced and all service can be from the front without moving unit from battery. Broiler has vitreous enamel grease pan located in front and has removable splasher back.

BROILER GRID: No sag grid is easily raised or lowered to six positions. Grid is 12½" x 22½" (280 square inches). One longlife burner. Broiler is thickly insulated.

CONSTRUCTION: Broiler is strongly built of heavy gauge rust-resisting material, securely fastened together to give years of satisfactory service. Streamlined flush front.

FINISH: Standard finish is a rich finely grained, black wrinkle finish known as Vulcadur, trimmed with chrome. Front top panel is of vitreous enamel. May also be furnished in partial or entire exterior in stainless steel. The Vulcan Sterling Stainless Steel units will be all stainless steel inside and out.

VULCAN • HART MANUFACTURING CO.

Factories and General Offices: BALTIMORE 22, MD. • LOUISVILLE 1, KENTUCKY
Sales Offices and Showrooms: NEW YORK • CHICAGO • LOS ANGELES • SAN FRANCISCO • BOSTON
In Canada: MOFFATS LTD., Weston, Ontario

FLUES AND METHOD OF CONNECTING

Vulcan ranges are regularly equipped with vertical flues but can also be supplied with secret flues also known as under flue. When ranges are to be equipped with secret flues it is very important that this be stated on order.

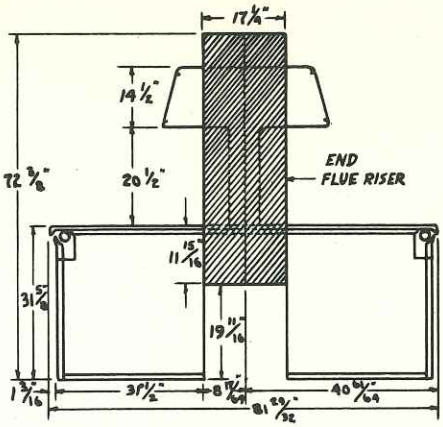

Sketch shows secret flue and risers extending up at end of a battery or ranges set back to back. Risers can also be placed in center.

VERTICAL FLUES

The vertical flue as used regularly on Vulcan ranges is built in between double walls of high shelves and Elevated or Salamander broilers.

When ranges are in battery with vertical flues, they should not be connected direct to a flue but should vent into a hood connected to a flue of adequate size with sufficient draught to freely ventilate it. **DO NOT CONNECT RANGES DIRECT TO FLUE IN CHIMNEY.**

SECRET FLUES

The secret flue (also referred to as under flue) is concealed under the rear overhang of cooking top of 41¼" deep Heavy Duty Ranges.

STANDARD FLUE RISERS FOR SECRETFLUE INSTALLATIONS 6700 LINE

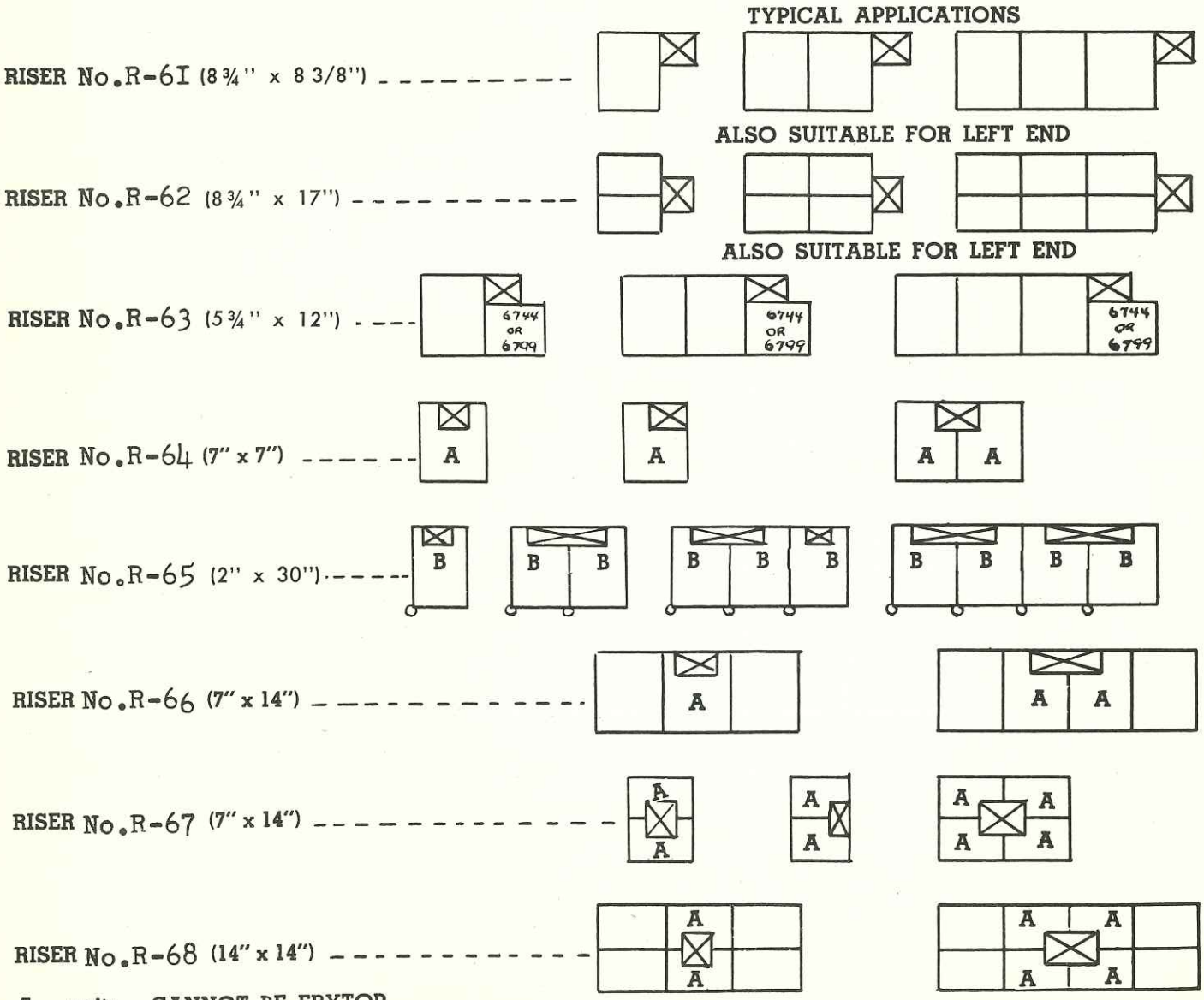

A — units — CANNOT BE FRYTOP

B — units — MAY BE FRYTOP

ALL BLANK UNITS MAY BE ANY 6700 SERIES RANGE (INCLUDING FRYTOP)
CONSIDER EXPANDO AND DEEPFAT FRYERS AS ½ UNITS

Form VV-167

VULCAN
HI-GLO CERAMIC BROILER

Model ■ 6708-SDL ■ 6708-SDS
HI-GLO CERAMIC BROILER

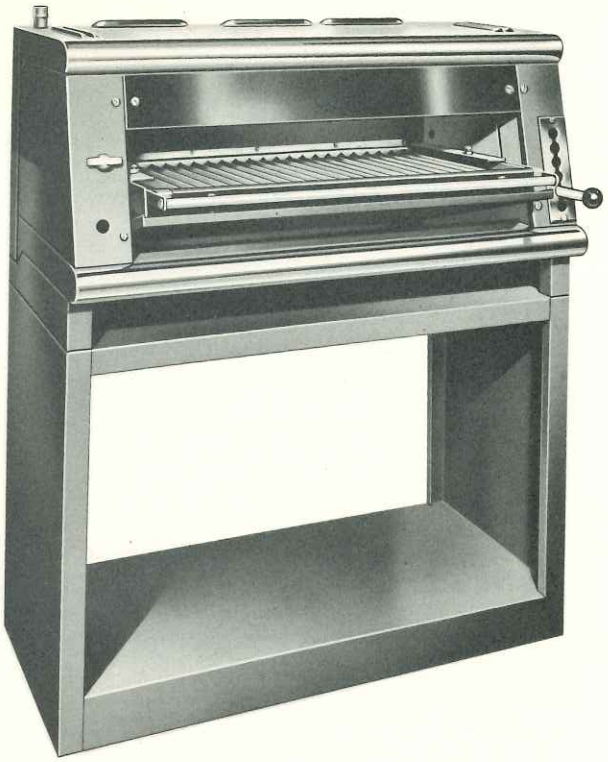

VULCAN NO. 6708 -SDS
CERAMIC BROILER

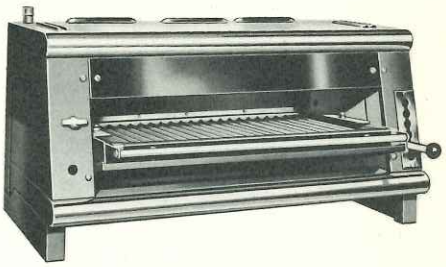

VULCAN NO. 6708 SDL
HI-GLO CERAMIC BROILER

SPECIFICATIONS

HI-GLO CERAMIC BROILER

GENERAL: This Vulcan Broiler is new in both design and operation. In appearance they match other Vulcan heavy duty equipment.

They are equipped with the new gas heated ceramics with balanced heat that give superior broiling results. Rays from the ceramics penetrate and broil the food quickly, while the rays from gas heat flame sear the meat and give it that rich brown color required by exacting patrons.

BROILER GRID: No sag grid is easily raised or lowered to six positions. Grid has 245 square inches of grid area. One longlife burner. Pilot burner. Broiler is thickly insulated.

CONSTRUCTION: Broiler is strongly built of heavy gauge rust-resisting material, securely fastened together to give years of satisfactory service. Streamlined flush front.

FINISH: Standard finish is a rich finely grained, black wrinkle finish known as Vulcadur, trimmed with chrome. Front top panel is of vitreous enamel. May also be furnished in partial or entire exterior in stainless steel. The Vulcan Sterling Stainless Steel units will be all stainless steel inside and out.

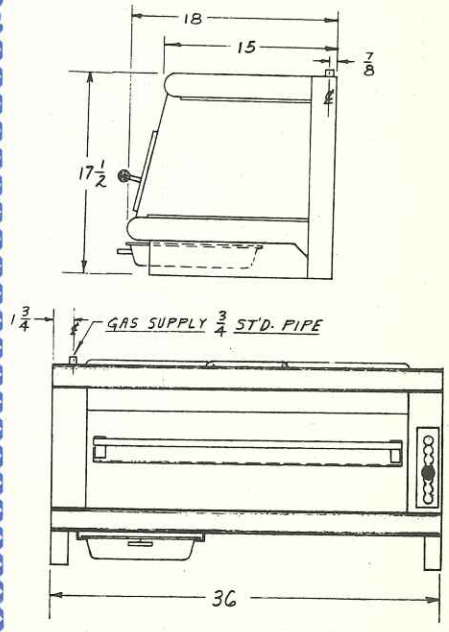

VULCAN•HART MANUFACTURING CO.

Factories and General Offices: BALTIMORE 22, MD. • LOUISVILLE 1, KENTUCKY
Sales Offices and Showrooms: NEW YORK • CHICAGO • LOS ANGELES • SAN FRANCISCO • BOSTON
In Canada: MOFFATS LTD., Weston, Ontario

Model ■ K-5729 ■ K-5729-S

HI-GLO CERAMIC BROILER

VULCAN

HI-GLO CERAMIC BROILER

GRIDDLE AND TOASTER

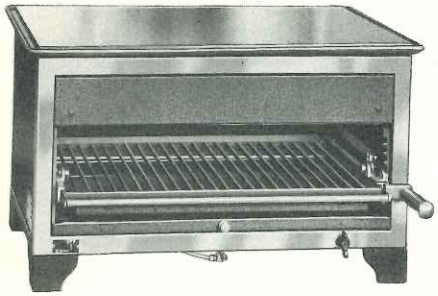

NO. K-5729
HI-GLO CERAMIC BROILER

VULCAN No. K-5729-S
HI-GLO CERAMIC BROILER

SPECIFICATIONS

An exceedingly useful appliance that does a wide variety of work in limited space. New Lo-Glo Ceramic burners give advantages of speed and even heat, and producing broiled foods with the crust and color desired by exacting patrons.

Flush front with concealed manifold and ratchet. Spring-balanced grid 26½″ wide x 15″ deep, heavy oval grid bars. Held in any of several positions by concealed ratchet. One Kromloy burner.

Highly polished Kromloy griddle, extra thick, evenly heated. Heated at no extra cost by broiler burners. Grease grooves and drain.

Made for use with Manufactured, Natural, Mixed or Liquefied Petroleum gases. State which fuel or gas, giving B.T.U. value and pressure. B.T.U. rating, 35,000

No. K-5729 Appr. Shpg. Wt. 20 lbs.

No. K-5729-S with stand Appr. Shpg. Wt. 290 lbs.

Vulcadur finish. Polished trim (nickel or chrome plate, extra). Available with legs, stand or cabinet.

DIMENSIONS: Width, 31⅛″. Depth 22½″. Height: No. 5729, 17″; No. 5729-S, 40¾″;

Broiler grid, 26½″ wide, 15″ deep. Griddle, 30¾″ wide, 18¼″ deep.

VULCAN

Smarter Design

Greater Flexibility

More Value

VULCAN•HART MANUFACTURING CO.

Factories and General Offices: BALTIMORE 22, MD. • LOUISVILLE 1, KENTUCKY
Sales Offices and Showrooms: NEW YORK • CHICAGO • LOS ANGELES • SAN FRANCISCO • BOSTON
In Canada: MOFFATS LTD., Weston, Ontario

VULCAN
ROASTING OVENS

Form VH-152

Model ■ 6799A
ROASTING OVENS

VULCAN NO. 6799 A DOUBLE ROASTING OVEN.

VULCAN STERLING STAINLESS STEEL

SPECIFICATIONS

GENERAL: Extra large size general purpose ovens for roasting and baking. Heavy duty plated wire oven rack. Porcelain enameled oven linings. Easy to clean.

OVEN: Oven completely insulated and has extra thick, positive spring balanced door mounted in self lubricating orlite bronze bearings. Heated by loop-type burner and has special stainless steel alloy oven bottom to insure against burn-out or warpage. Temperature controlled by Robertshaw heavy duty thermostat. 100% safely shut-off pilot light standard equipment.

CONSTRUCTION: Oven is strongly built of heavy gauge rust-resisting material, securely fastened together to give years of satisfactory service. Streamlined flush front. May be installed on legs, toe bases, tile base, or directly on the floor.

FINISH: Standard finish is a rich finely grained, black wrinkle finish known as Vulcadur, trimmed with chrome. May also be furnished in partial or entire exterior in stainless steel. The Vulcan Sterling Stainless Steel units will be all stainless steel inside and out.

VIEW OF OVEN INTERIOR

VULCAN • HART MANUFACTURING CO.

Factories and General Offices: BALTIMORE 22, MD. • LOUISVILLE 1, KENTUCKY
Sales Offices and Showrooms: NEW YORK • CHICAGO • LOS ANGELES • SAN FRANCISCO • BOSTON
In Canada: MOFFATS LTD., Weston, Ontario

WORLD'S FINEST COOKING EQUIPMENT

SPECIFICATIONS

ROASTING OVENS

VULCADUR FINISH	☐ 6799 A
STERLING STAINLESS STEEL	☐ 16799 A
OVERALL SIZE	
Deep	41¼"
Wide	34"
High	68 7/16
High—with toe base or legs	70 13/16
Each Oven—Wide	26"
Deep	28"
High	15"
Burner Ratings in B.T.U.'s per hour	
Each Oven	45,000
Total	90,000
Gas Manifold	1¼"

UNIT WILL BATTERY WITH 35⅜" OR 41¼" DEEP EQUIPMENT.

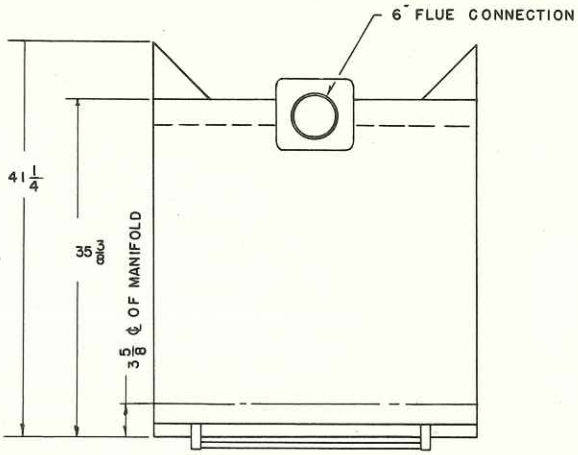

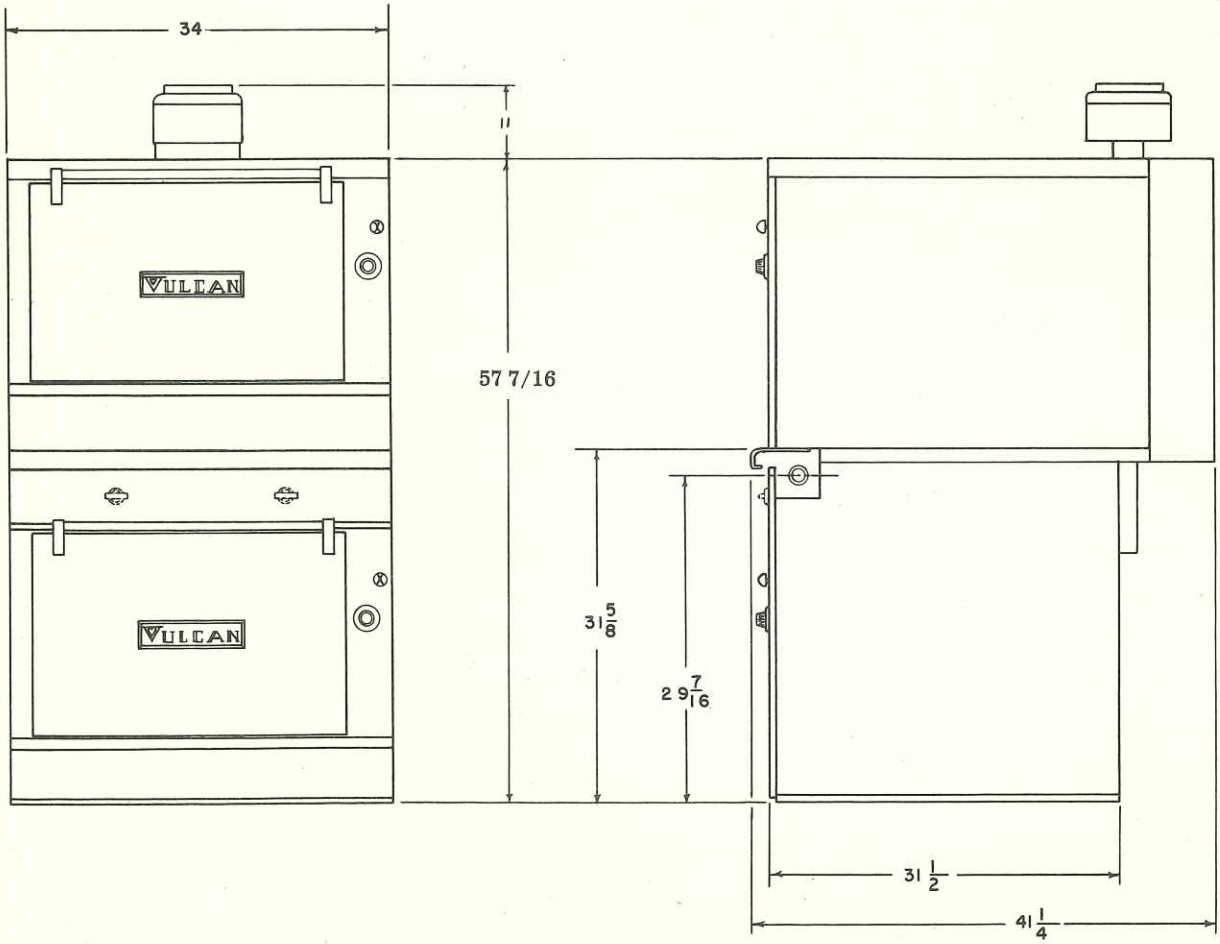

VULCAN-HART MANUFACTURING COMPANY, INCORPORATED

3600 North Point Boulevard
BALTIMORE 22, MARYLAND

VULCAN
HEAVY DUTY RANGES

Form No. VH-157-A

TOP SECTIONS

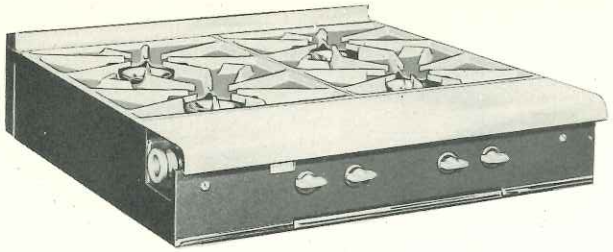

OPEN BURNER TOP

Model No. 0145 (35 3/8" Deep)
Model No. 0745 (41 1/4" Deep)

COOKING TOP: New semi-solid grate is heavier and stronger. Concentrates heat on utensil. It has smooth continuous surface on top of bars so heavy pots can be easily slid over entire top without lifting. There are four giant, circular, non-clog burners of improved design and are equipped with flashtype lighting. Below burners there is a removable drip tray. Burner box porcelain enameled.

HOT TOP RANGE

Model No. 0151 (35 3/8" Deep)
Model No. 0751 (41 1/4" Deep)

COOKING TOP: Polished chrome-alloy top castings — two half moon sections with patented radial fins to carry heat over entire top. Efficient high temperature center lid and ring. May be furnished in nickel-alloy (Ni-Resist). Patented 4-ring, 4-control aerated hot blast burner gives maximum flexibility, speed and economy. Target type lighter. Extra thick refractory insulating fire brick. Burner box porcelain enameled. Standard tops are chrome-alloy.

EVEN HEAT TOP

Model No. 0172 (35 3/8" Deep)
Model No. 0772 (41 1/4" Deep)

COOKING TOP: Extra heavy two piece heavy chrome-alloy top with under side reinforcing ribs or flanges on four sides and center. Projections on under side absorb and diffuse heat, giving even temperature under entire plate. Four aerated bar burners, each unit of two controlled by a high-medium-low valve so one or both plates can be heated to different temperatures. Burner box porcelain enameled and properly insulated. Even-Heat Tops can be furnished in nickel-alloy (Ni-Resist).

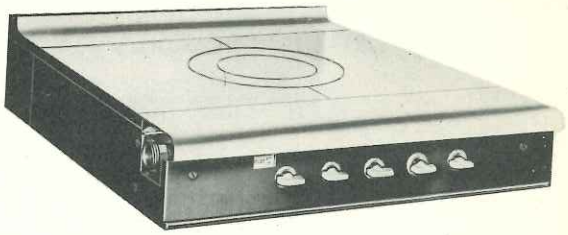

SUPER RADIAL FIN HOT TOP

Model No. 0130 (35 3/8" Deep)
Model No. 0730 (41 1/4" Deep)

COOKING TOP: Patented Super-Radial Fin construction provides more heat absorption surface than ordinary tops, heats faster, saves gas, and directs flow of heat to every part of top, assuring better heat distribution and greater top capacity. Standard tops are chrome-alloy. Nickel-alloy (Ni-Resist) can be furnished.

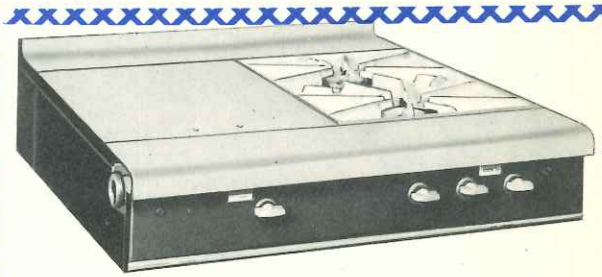

COMBINATION EVEN HEAT TOP WITH TWO OPEN BURNERS

Model No. 0173 (35 3/8" Deep)
Model No. 0773 (41 1/4" Deep)

COOKING TOP: One section is extra heavy one piece heavy chrome-alloy top. Projections on under side absorb and diffuse heat, giving even temperature under entire plate. Two aerated bar burners, controlled by a high-medium-low valve. One section is new semi-solid grate which is heavier and stronger. Concentrates heat on utensil. It has smooth continous surface, two giant, circular non-clog burners. Burner box porcvelain enameled and properly insulated. Even-heat Top can be furnished in nickel-alloy (Ni-Resist).

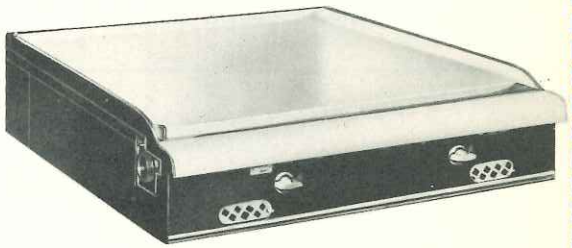

FRY TOP RANGE

Model No. 0160 (35 3/8" Deep)
Model No. 0760 (41 1/4" Deep)

COOKING TOP: Extra large, highly polished, one piece fry plate constructed of chrome-alloy casting with high grease retaining sides and back. Spatula width grease trough along front empties directly into large exposed grease container which is easily removed for cleaning. Equipped with leveling bolts at rear corners. High BTU rating insures maintaining frying temperatures under heavy loads. Four burners controlled by two high-medium-low heavy duty valves. Burner box porcelain enameled and properly insulated. Fry plate can be furnished in nickel-alloy (Ni-Resist). Thermostatic top heat controls can be furnished on this unit.

VULCAN • HART MANUFACTURING CO.

Factories and General Offices: BALTIMORE 22, MD. • LOUISVILLE 1, KENTUCKY
Sales Offices and Showrooms: NEW YORK • CHICAGO • LOS ANGELES • SAN FRANCISCO • BOSTON
In Canada: MOFFATS LTD., Weston, Ontario

VULCAN

WORLD'S FINEST COOKING EQUIPMENT

SPECIFICATIONS

41¼" DEEP SERIES

MODEL NO.	DIMENSIONS	BTU
0730 Super Radial Fin Top	34"Wx41¼"D	45000
0751 Hot Top	34"Wx41¼"D	50000
0745 Open Burners	34"Wx41¼"D	60000
0760 Fry Top	34"Wx41¼"D	80000
0772 Even Heat Top	34"Wx41¼"D	80000
0773 Combination Even Heat & Oven Burners	34"Wx41¼"D	70000
0645 Open Burners	17"Wx41¼"D	30000
0660 Fry Top	17"Wx41¼"D	40000
0672 Even Heat Top	17"Wx41¼"D	40000

35⅜" DEEP SERIES

0130 Super Radial Fin Top	34"Wx35⅜"D	45000
0151 Hot Top	34"Wx35⅜"D	50000
0145 Open Burners	34"Wx35⅜"D	60000
0160 Fry Top	34"Wx35⅜"D	80000
0172 Even Heat Top	34"Wx35⅜"D	80000
0173 Combination Even Heat & Open Burner	34"Wx35⅜"D	70000
0345 Open Burners	17"Wx35⅜"D	30000
0360 Fry Top	17"Wx35⅜"D	40000
0372 Even Heat Top	17"Wx35⅜"D	40000

STANDS
With Adjustable Legs

0017 For 17" Unit	17" Wide
0034 For 34" Unit or 2—17" Units	34" Wide
0051 For 1—34" Unit and 1—17" Unit	51" Wide
0068 For 2—34" Units or any combination of Units TOTALING 68"	68" Wide

STANDS WILL FIT BOTH 41¼" AND 35⅜" SERIES

GENERAL SPECIFICATIONS

FINISH: Standard finish is a rich finely grained, black wrinkle finish known as Vulcadur, trimmed with chrome. May also be furnished in partial or entire exterior in stainless steel. The Vulcan Sterling Stainless Steel units will be all stainless steel inside and out. Stands will be either standard black Vulcadur or with chrome plated legs, as specified.

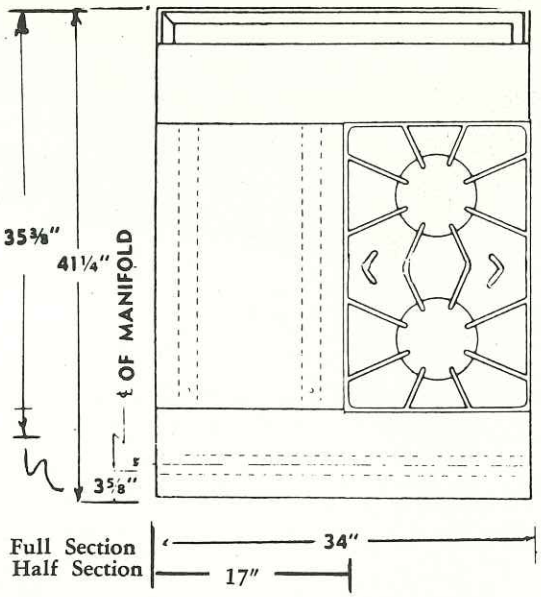

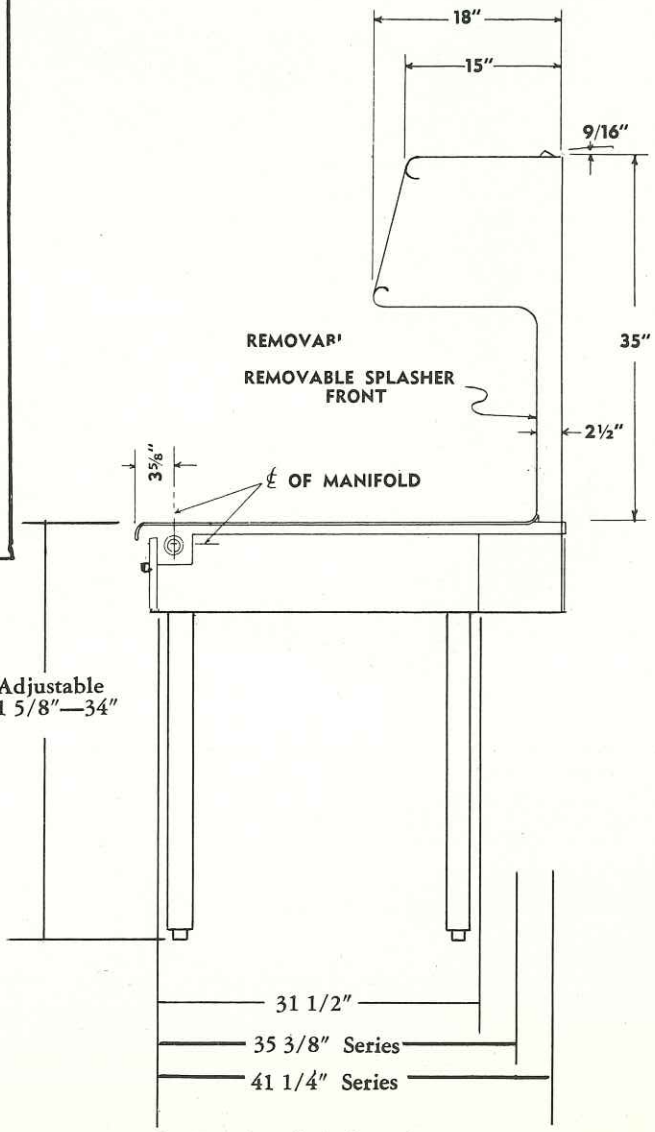

On Leg Stand And With High Shelf

Models 0730, 0660, and 0645
Mounted on No. 0068 Stand

Vulcan Hart Manufacturing Co., 3600 North Point Boulevard, Baltimore 22, Maryland

Form VUC-41-A

VULCAN
HEAVY DUTY RANGES

Model 6172-45A ■ 6772-45A ■
COMBINATION EVEN HEAT
AND OPEN TOP RANGE

VULCAN No. 6172-45A
RANGE WITH No. 6782
DOUBLE DECK HIGH
SHELF

VULCAN STERLING
STAINLESS STEEL

SPECIFICATIONS

COOKING TOP: One section is extra heavy one piece heavy chrome-alloy top. Projections on under side absorb and diffuse heat, giving even temperature under entire plate. Two aerated bar burners, controlled by a high-medium-low valve. One section is new semi-solid grate which is heavier and stronger. Concentrates heat on utensil. It has smooth continuous surface, two giant, circular, non-clog burners. Burner box porcelain enameled and properly insulated. Even-heat Top can be furnished in nickel-alloy (Ni-Resist).

OVEN: Extra large size general purpose oven for roasting and baking. Heavy duty plated wire oven rack. Porcelain enameled oven linings. Oven completely insulated and has extra thick, positive spring balanced door mounted in self lubricating orlite bronze bearings. Heated by loop-type burner and has special stainless steel alloy oven bottom to insure against burn-out or warpage. Temperature controlled by Robertshaw heavy duty thermostat. 100% safety shut-off pilot light standard equipment.

CONSTRUCTION: Range is strongly built of heavy gauge rust-resisting material, securely fastened together to give years of satisfactory service. Streamlined flush front. May be installed on legs, toe bases, tile base, or directly on the floor. Approved by American Gas Association for installation anywhere, even on non-fireproof floors.

FINISH: Standard finish is a rich finely grained, black wrinkle finish known as Vulcadur, trimmed with chrome. May also be furnished in partial or entire exterior in stainless steel. The Vulcan Sterling Stainless Steel units will be all stainless steel inside and out.

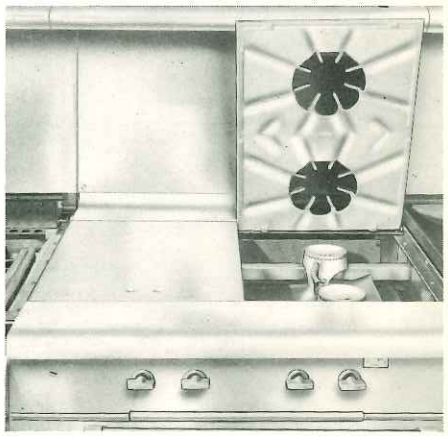

OPEN TOP
OF No. 6772-45A & 6172-45A

VULCAN • HART MANUFACTURING CO.

Factories and General Offices: BALTIMORE 22, MD. • LOUISVILLE 1, KENTUCKY
Sales Offices and Showrooms: NEW YORK • CHICAGO • LOS ANGELES • SAN FRANCISCO • BOSTON
In Canada: MOFFATS LTD., Weston, Ontario

VULCAN

WORLD'S FINEST COOKING EQUIPMENT

SPECIFICATIONS

Combination Even Heat and Open Top Range With Oven

VULCADUR FINISH	☐ 6172-45A	☐ 6772-45A
STERLING STAINLESS STEEL	☐ 16172-45A	☐ 16172-45A
Range—Deep	35⅜"	41¼"
Wide	34"	34"
High	31⅝"	31⅝"
High—with toe base or legs	34"	34"
Oven — Wide	26"	26"
Deep	28"	28"
High	15"	15"
Burner Ratings in B.T.U.'s per hour—		
Top	70,000	70,000
Oven	45,000	45,000
Gas Manifold	1¼"	1¼"

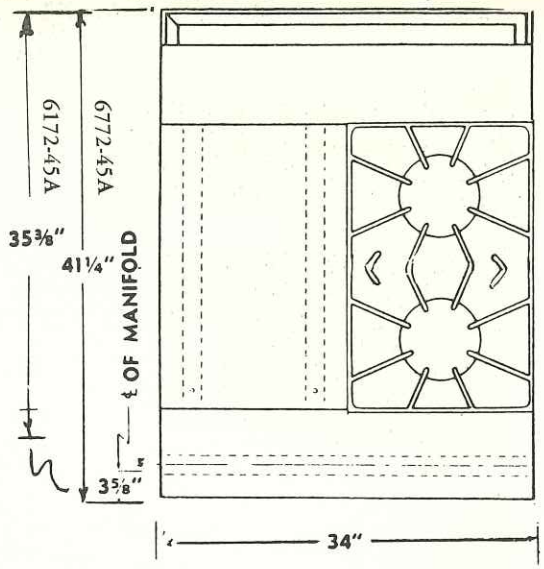

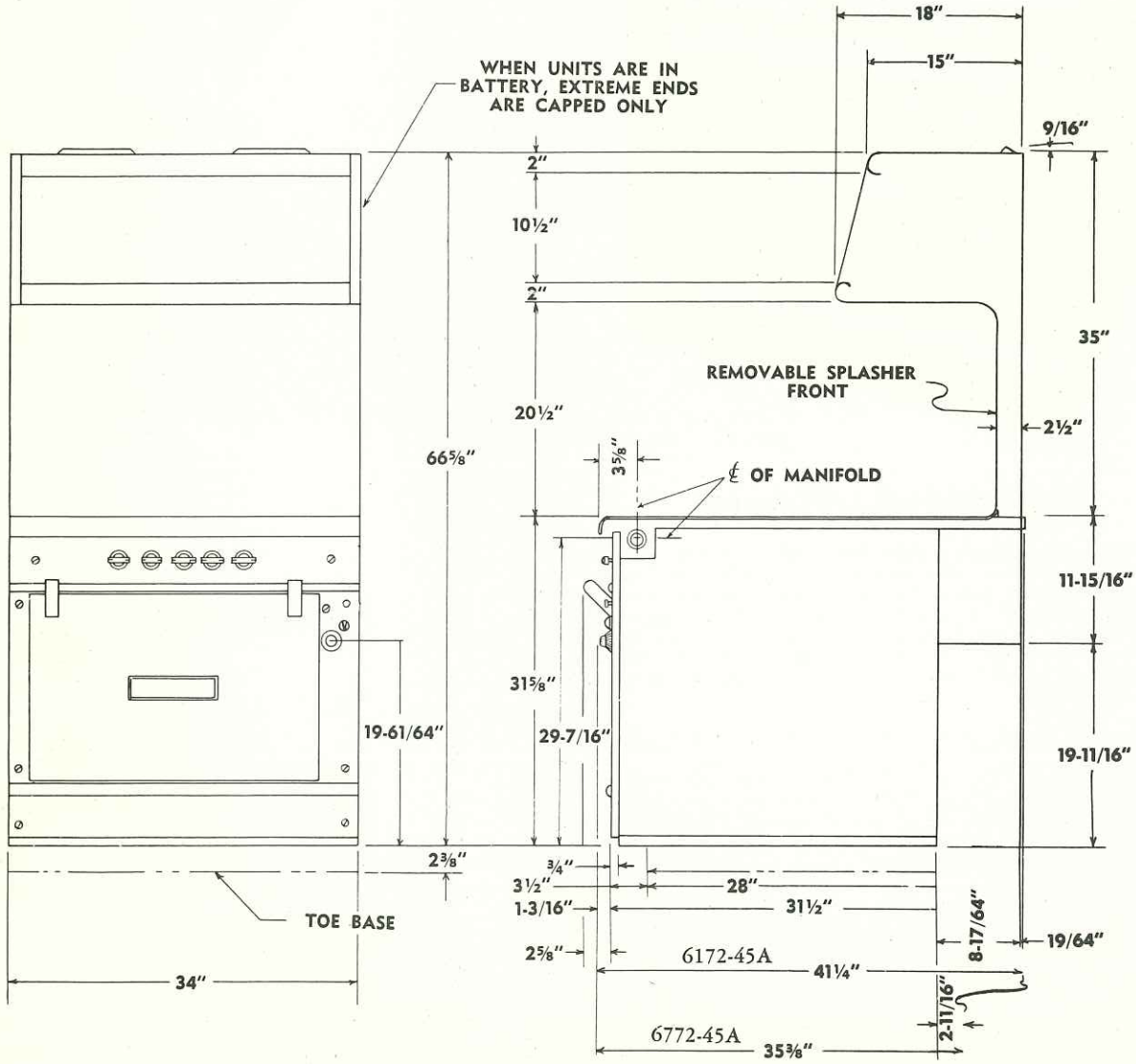

VULCAN-HART MANUFACTURING COMPANY, INCORPORATED

3600 North Point Boulevard

BALTIMORE 22, MARYLAND

VULCAN

HEAVY DUTY RANGES

Model 6160-45A ☐ 6760-45A ☐
COMBINATION FRY TOP
AND OPEN TOP RANGE

VULCAN NO. 6760-45A
RANGE WITH NO. 6782
DOURLE DECK HIGH
SHELF

VULCAN STERLING
STAINLESS STEEL

SPECIFICATIONS

COOKING TOP: Extra large, highly polished, one piece fry plate constructed of chrome-alloy casting with high grease retaining sides and back. Spatula width grease trough along front empties directly into large exposed grease container which is easily removed for cleaning. One section is new semi-solid grate which is heavier and stronger. Concentrates heat on utensil. It has smooth continuous surface, two giant, circular, non-clog burners. Burner box porcelain enameled and properly insulated. Even-heat Top can be furnished in nickel-alloy (Ni-Resist).

OVEN: Extra large size general purpose oven for roasting and baking. Heavy duty plated wire oven rack. Porcelain enameled oven linings. Oven completely insulated and has extra thick, positive spring balanced door mounted in self lubricating orlite bronze bearings. Heated by loop-type burner and has special stainless steel alloy oven bottom to insure against burn-out or warpage. Temperature controlled by Robertshaw heavy duty thermostat. 100% safety shut-off pilot light standard equipment.

CONSTRUCTION: Range is strongly built of heavy gauge rust-resisting material, securely fastened together to give years of satisfactory service. Streamlined flush front. May be installed on legs, toe bases, tile base, or directly on the floor. Approved by American Gas Association for installation anywhere, even on non-fireproof floors.

FINISH: Standard finish is a rich finely grained, black wrinkle finish known as Vulcadur, trimmed with chrome. May also be furnished in partial or entire exterior in stainless steel. The Vulcan Sterling Stainless Steel units will be all stainless steel inside and out.

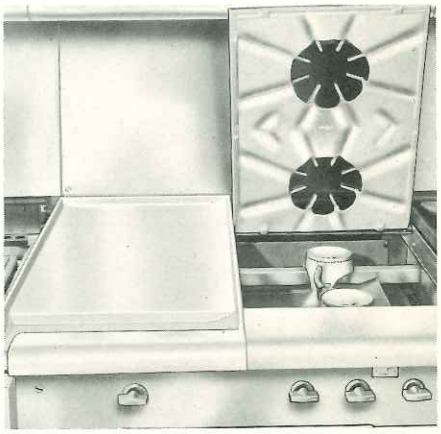

TOP
OF NO. 6760-45A & 6160-45A

VULCAN • HART MANUFACTURING CO.

Factories and General Offices: BALTIMORE 22, MD. • LOUISVILLE 1, KENTUCKY
Sales Offices and Showrooms: NEW YORK • CHICAGO • LOS ANGELES • SAN FRANCISCO • BOSTON
In Canada: MOFFATS LTD., Weston, Ontario

VULCAN

WORLD'S FINEST COOKING EQUIPMENT

SPECIFICATIONS

Combination FRY-TOP and Open Top Range With Oven

VULCADUR FINISH	☐ 6160-45A	☐ 6760-45A
STERLING STAINLESS STEEL	☐ 16160-45A	☐ 16760-45A
Range—Deep	35⅜"	41¼"
Wide	34"	34"
High	31⅝"	31⅝"
High—with toe base or legs	34"	34"
Oven — Wide	26"	26"
Deep	28"	28"
High	14½"	14½"
Burner Ratings in B.T.U.'s per hour—		
Top	70,000	70,000
Oven	45,000	45,000
Gas Manifold	1¼"	1¼"

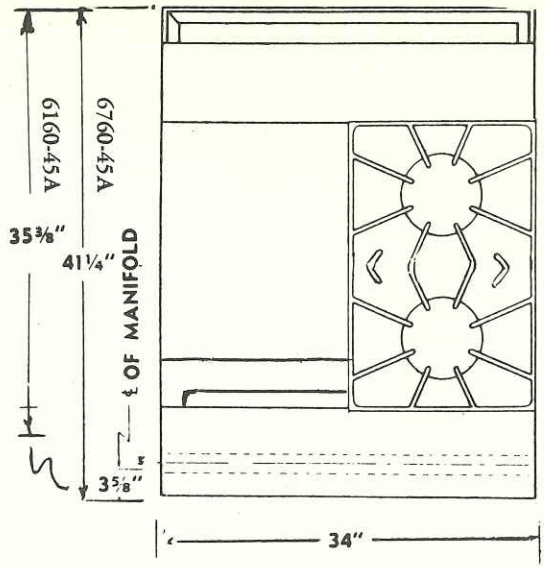

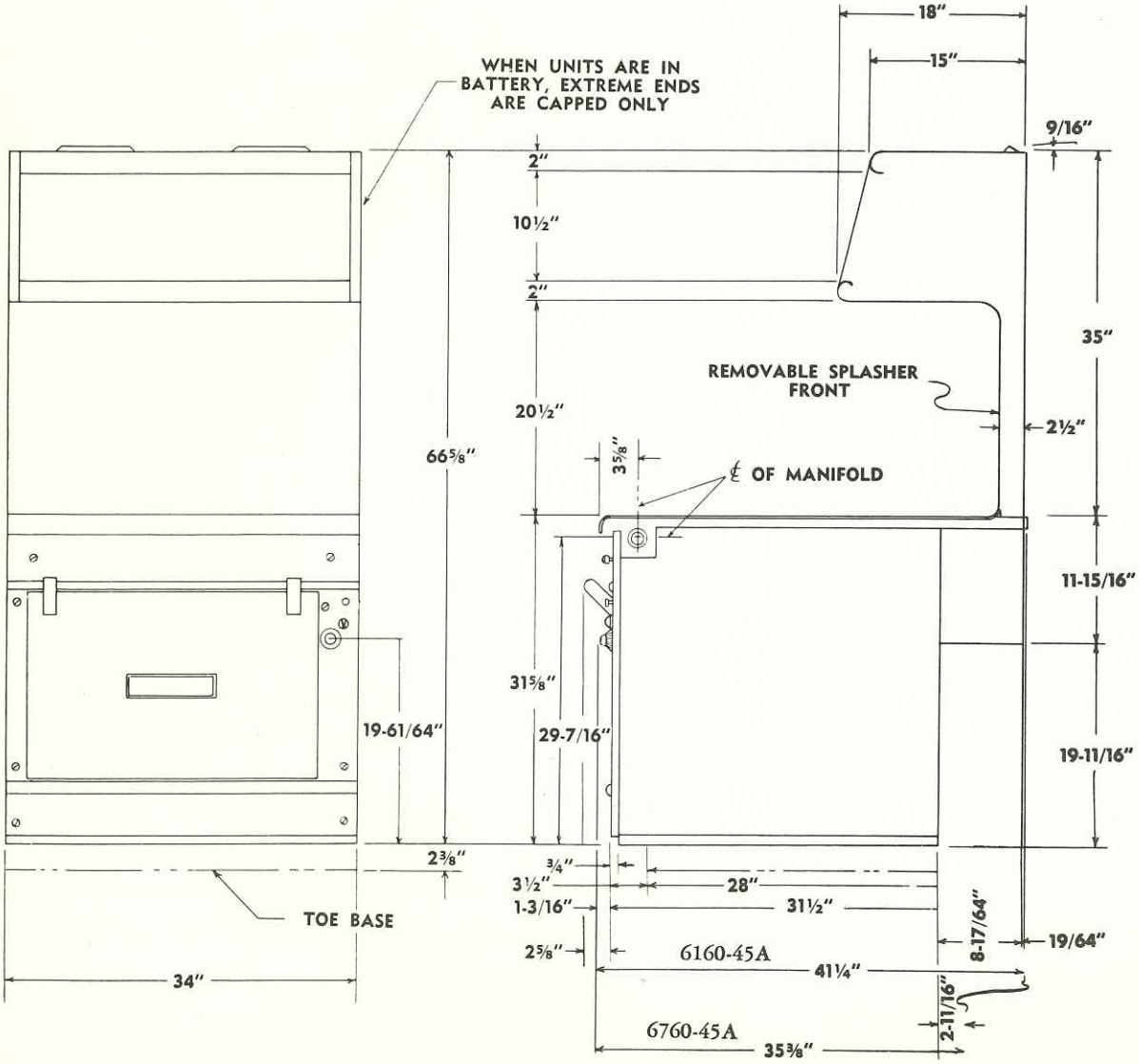

VULCAN-HART MANUFACTURING COMPANY, INCORPORATED

3600 North Point Boulevard
BALTIMORE 22, MARYLAND

RESTAURANT RANGES
(GAS)

VULCAN RESTAURANT RANGES

No. 36 SERIES

No. 36
BLACK BAKED ENAMEL

THE WORLD'S FINEST COOKING EQUIPMENT

- √ Six top burners
- √ Any combination of open top or hot top burners 24" or 36" griddle
- √ Large 26" oven—fully insulated—fully enameled
- √ Automatic top burner lighting
- √ Convenient front plate bar
- + Plus all the other well known features that make VULCAN the "World's Finest"

Automatic oven lighting with safety shutoff also available.

ALSO AVAILABLE IN
Silvertone
Finish

The same high standard of quality materials and workmanship that has built an enviable reputation for Vulcan's heavy-duty line is upheld in the manufacture of the new Vulcan restaurant ranges.

Fast heating oven well insulated. Temperature control range from 550° to 250°. Large top cooking surface. cast iron non-clogging, efficient burners; porcelain enameled open burner sections; automatic lighters; thermostatically controlled ovens.

The new Vulcan Restaurant Range has "eye appeal" that inspires pride in the appearance of any kitchen. The new Silvertone Finish is a specially developed process for Vulcan. Also available in beautiful stainless steel or baked black enamel finishes.

No. 36 SS
Stainless Steel Finish

No. 36 Series Specifications

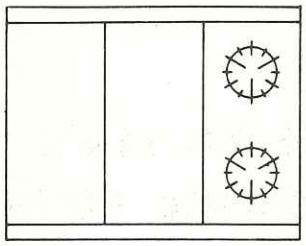

36 B

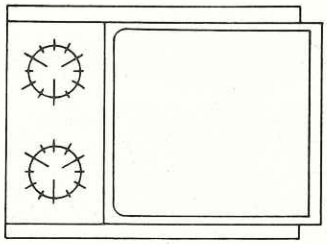

36 F

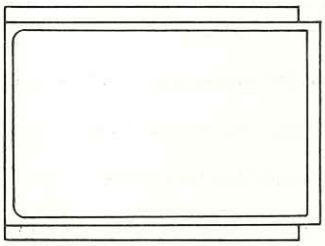

36 X

Overall size	36" wide	31" deep	57⅝" high
Cooking surface	36" wide	26⅝" deep	35" high
Oven size	26" wide	22½" deep	14½" high

Range with griddle top 39" wide

1" manifold connection

Available for any type of gas, manufactured, natural, mixed or L.P.

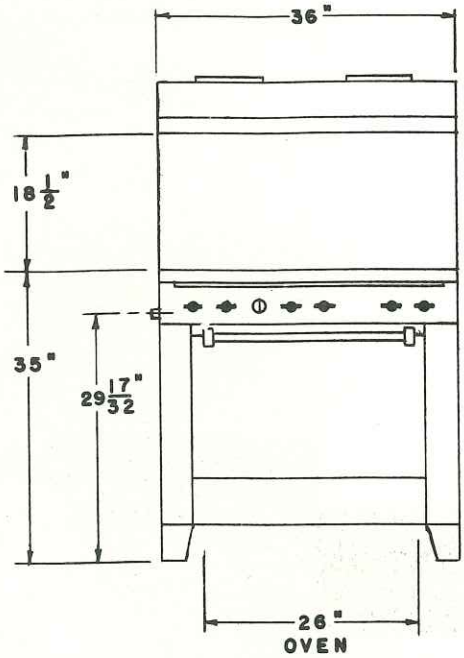

Front View

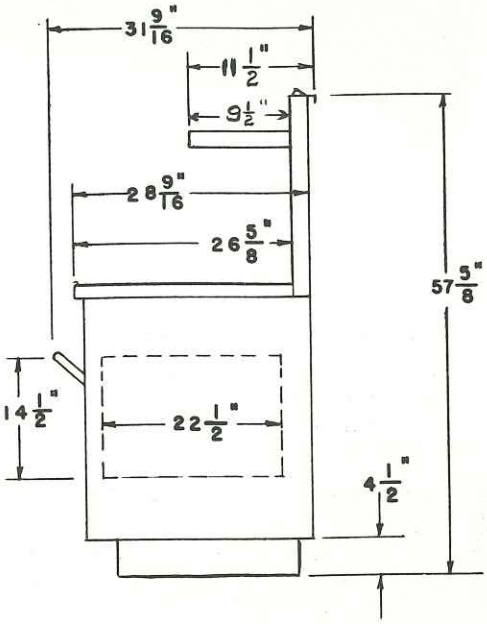

Side View

VULCAN·HART MANUFACTURING CO.

3600 NORTH POINT BOULEVARD BALTIMORE 22, MARYLAND

VULCAN RESTAURANT RANGES

No. 60 SERIES

No. 60
BLACK BAKED ENAMEL

THE WORLD'S FINEST COOKING EQUIPMENT

- √ Ten top burners
- √ Any combination of open top or hot top sections Griddle available on right side
- √ Two large 26" ovens—fully insulated—fully enameled
- √ Each oven controlled with Robertshaw thermostat
- √ Automatic top burner lighting
- √ Convenient front plate bar
- + Plus all the other well known features that make VULCAN the "World's Finest"

Automatic oven lighting with safety shutoff also available.

ALSO AVAILABLE IN
Silvertone
Finish

The same high standard of quality materials and workmanship that has built an enviable reputation for Vulcan's heavy-duty line is upheld in the manufacture of the new Vulcan restaurant ranges.

Non-clog burners. Large cooking surface. insulated oven; cast iron non-clogging, efficient burners; porcelain enameled open burner sections; automatic lighters; thermostatically controlled ovens.

The new Vulcan Restaurant Range has "eye appeal" that inspires pride in the appearance of any kitchen. The new Silvertone Finish is a specially developed process for Vulcan. Also available in beautiful stainless steel or baked black enamel finishes.

No. 60 SS
Stainless Steel Finish

No. 60 Series Specifications

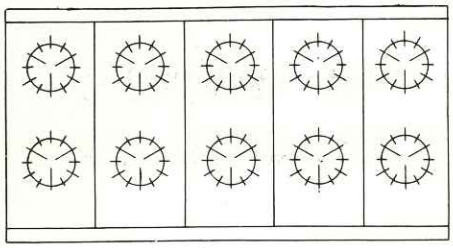

60

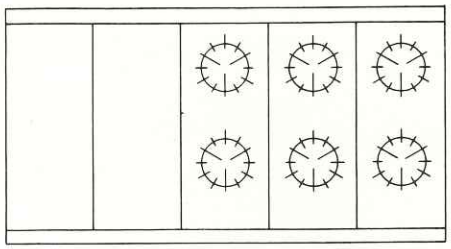

60 B

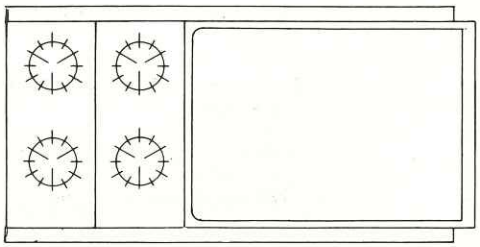

60X

Overall size	60" wide	31" deep	57⅝" high
Cooking surface	60" wide	26⅝" deep	35" high
Oven size (each)	26" wide	22½" deep	14½" high

Range with griddle top 63" wide

1" manifold connection

Available for any type of gas, manufactured, natural, mixed or L.P.

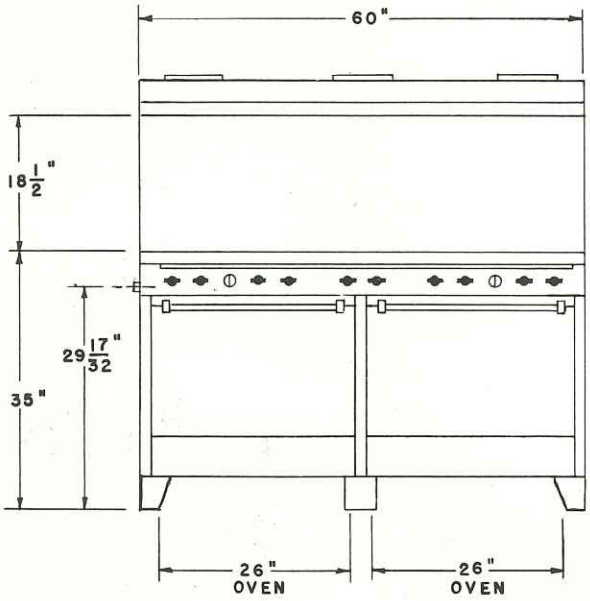

Front View

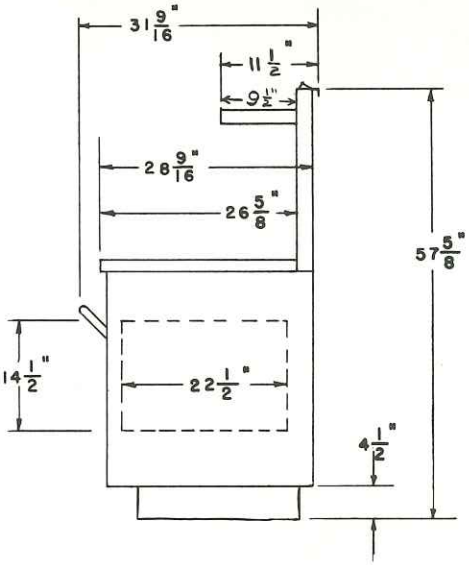

Side View

VULCAN·HART MANUFACTURING CO.

3600 NORTH POINT BOULEVARD BALTIMORE 22, MARYLAND

VULCAN RESTAURANT RANGES

No. 160 SERIES

THE WORLD'S FINEST COOKING EQUIPMENT

- √ Six top burners
- √ Any combination of open or hot top burners
- √ Large 26" oven—fully insulated—fully enameled
- √ Robertshaw thermostat
- √ Heavy cast iron highly polished griddle with large convenient grease catch
- √ Large ceramic radiant broiler
- √ Automatic top burner lighting
- √ Convenient front plate bar
- + Plus all the other well known features that make VULCAN the "World's Finest"

Automatic oven lighting with safety shutoff also available.

No. 160
BLACK BAKED ENAMEL

ALSO AVAILABLE IN
Silvertone
Finish

The same high standard of quality materials and workmanship that has built an enviable reputation for Vulcan's heavy-duty line is upheld in the manufacture of the new Vulcan restaurant ranges.

Non-clog burners. Large top cooking surface. Heat from broiler burners heats griddle effecting fuel economies. Fast heating oven well insulated. Temperature control range from 550° to 250°.

The new Vulcan Restaurant Range has "eye appeal" that inspires pride in the appearance of any kitchen. The new Silvertone Finish is a specially developed process for Vulcan. Also available in beautiful stainless steel or baked black enamel finishes.

Full size broiler with ceramic type burner; insulated oven; heavy cast iron, highly polished griddle plate; enduring cast iron non-clogging, efficient burners; porcelain enameled open burner sections; automatic lighters; thermostatically controlled ovens.

No. 160 SS
Stainless Steel Finish

NO. 160 Series Specifications

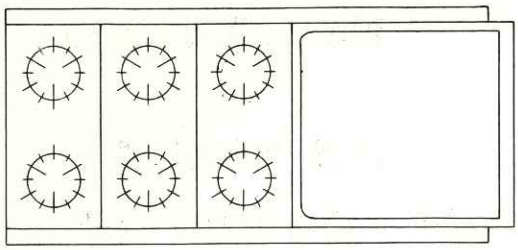

160

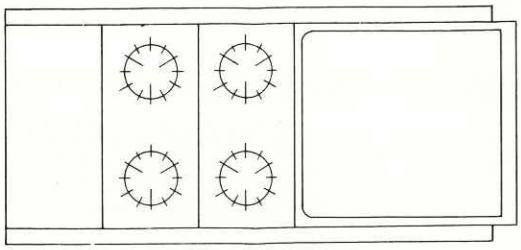

160 A

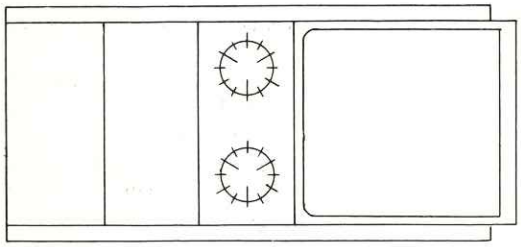

160 B

Overall size	63" wide	31" deep	57⅝". high
Cooking surface open or hot top	36" wide	26⅝" deep	35" high
Griddle	24" wide	24" deep	35" high
Oven size	26" wide	22½" deep	14½" high

Ceramic broiler opening 21" wide

1" manifold connection

Available for any type of gas, manufactured, natural, mixed or L.P.

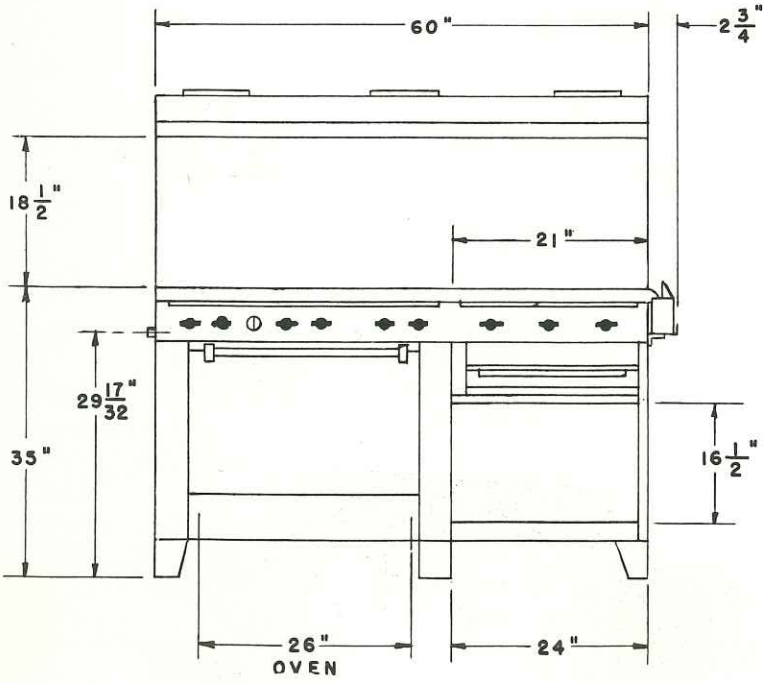

rront View

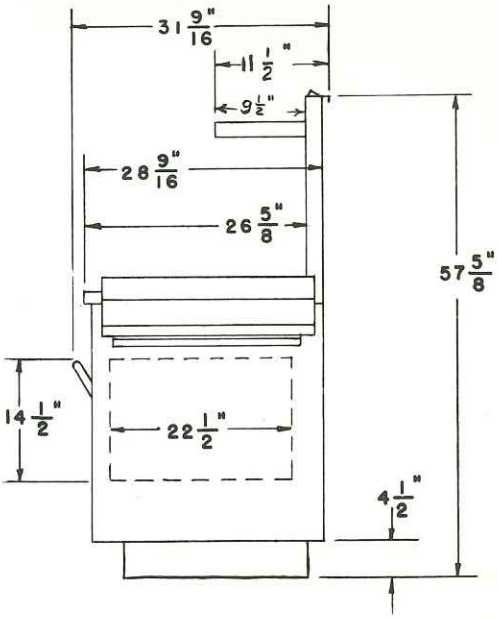

Side View

VULCAN·HART MANUFACTURING CO.

3600 NORTH POINT BOULEVARD BALTIMORE 22, MARYLAND

VULCAN RESTAURANT RANGES

No. 260 SERIES
THE WORLD'S FINEST COOKING EQUIPMENT

No. 260
BLACK BAKED ENAMEL

FEATURES

- √ Six top burners—individually controlled
- √ Any combination of open or hot top burners
- √ Two large (26") ovens—fully enameled—fully insulated
- √ Each oven controlled with Robertshaw thermostat
- √ Raised heavy 24" cast iron griddle with large convenient grease catch.
- √ Large ceramic radiant broiler
- √ Automatic top burner lighting
- √ Convenient front plate bar
- + Plus all the other well known features that make VULCAN the "World's Finest"

Automatic oven lighting with safety shutoff also available.

ALSO AVAILABLE IN
Silvertone
Finish

Non-clog burners. Large top cooking surface. Heat from broiler burners heats griddle effecting fuel economies. Fast heating oven well insulated. Temperature control range from 550° to 250°.

The new Vulcan Restaurant Range has "eye appeal" that inspires pride in the appearance of any kitchen. The new Silvertone Finish is a specially developed process for Vulcan. Also available in beautiful stainless steel or baked black enamel finishes.

The same high standard of quality materials and workmanship that has built an enviable reputation for Vulcan's heavy-duty line is upheld in the manufacture of the new Vulcan restaurant ranges.

Full size broiler with ceramic type burner; insulated oven; heavy cast iron, highly polished griddle plate; enduring cast iron non-clogging, efficient burners; porcelain enameled open burner sections; automatic lighters; thermostatically controlled ovens.

No. 260 SS
Stainless Steel Finish

No. 260 Series Specifications

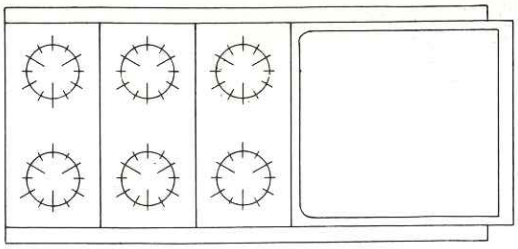

260

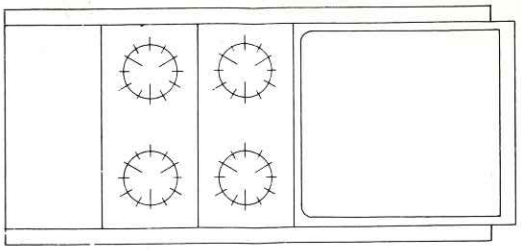

260 A

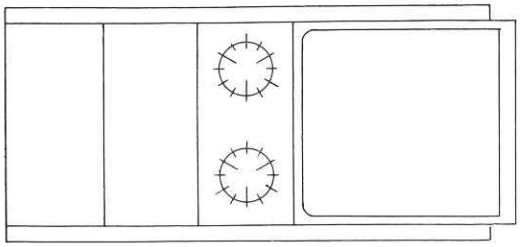

260 B

Overall size	63" wide	31" deep	57⅝" high
Cooking surface open or hot top	36" wide	26⅝" deep	35" high
Griddle	24" wide	24" deep	41" high
Oven size	26" wide	22½" deep	14½" high

Ceramic broiler opening 21" wide

1" manifold connection

Available for any type of gas, manufactured, natural, mixed or L.P.

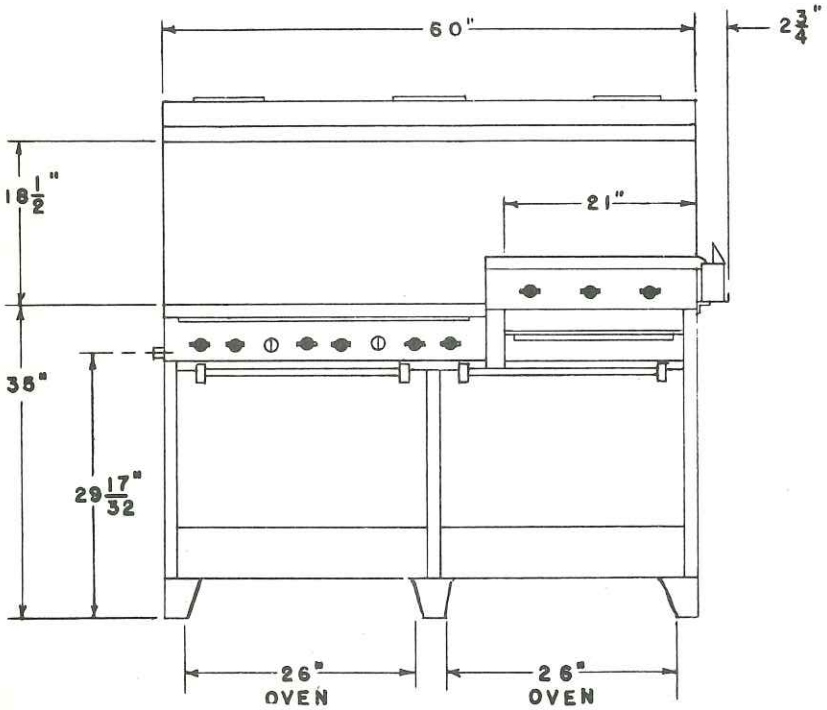

Front View

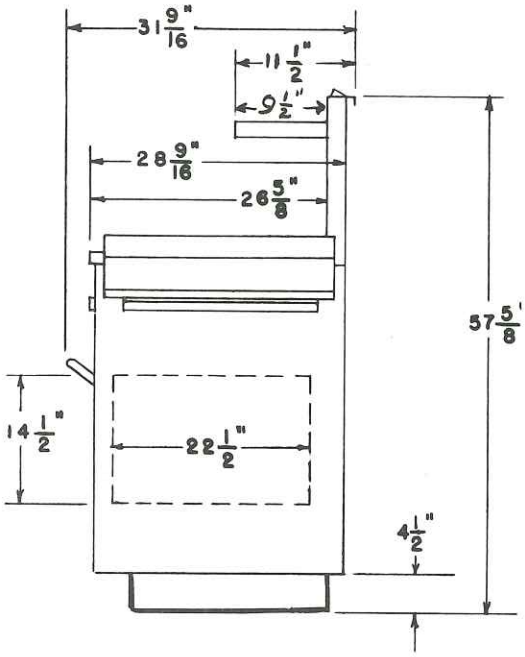

Side View

VULCAN-HART MANUFACTURING CO.

3600 NORTH POINT BOULEVARD BALTIMORE 22, MARYLAND

VULCAN RESTAURANT OVENS

No. 399A

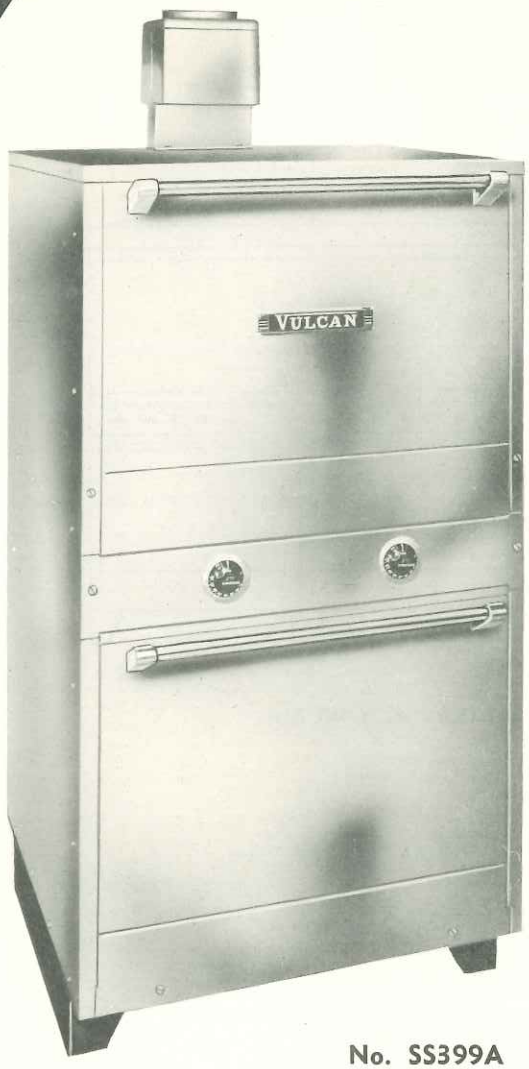

No. SS399A
STAINLESS STEEL EXTERIOR

THE WORLD'S FINEST COOKING EQUIPMENT

√ Two large 26" ovens, fully insulated — fully enameled.

√ Thermostatically controlled heat 550° to 250°.

√ Automatic oven lighting with 100% safety shut off.

√ Positive spring mounted doors mounted in self lubricating orlite bronze bearing.

√ Can be placed in battery with VULCAN Restaurant Range.

+ Plus all the other well known features that make VULCAN the "World's Finest".

AVAILABLE IN
BLACK BAKED ENAMEL
SILVERTONE FINISH
OR
STAINLESS STEEL

The same high standard of quality materials and workmanship that has built an enviable reputation for Vulcan's heavy-duty line is upheld in the manufacture of the new Vulcan restaurant roasting ovens.

These roasting ovens will battery with each other or with a Vulcan Restaurant Range.

The new restaurant roasting oven has "eye appeal" that inspires pride in the appearance of any kitchen. The new Silvertone Finish is a specially developed process for Vulcan. Also available in beautiful stainless steel or baked black enamel finishes.

OVERALL SIZE	30½" wide	32¾" deep	69" high
Oven Size (2)	26" wide	22½" deep	14½" high
Burner Rating	25000 BTU each oven 50000 Total		
Flue Diameter	6"		
Gas Manifold Correction	1"		

Available for any type gas, please specify.

No. 399A
Black Baked Enamel Finish

399 DOUBLE ROASTING OVEN

SPECIFICATIONS

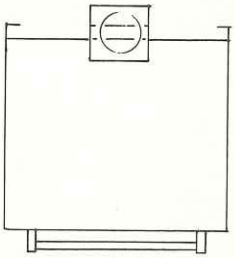

TOP VIEW

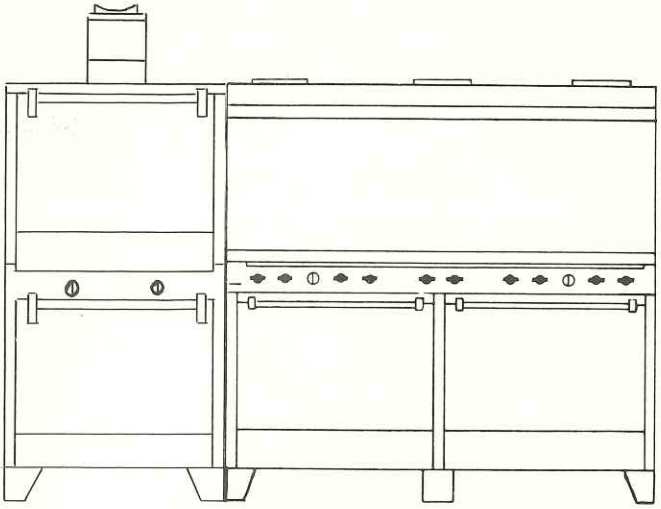

IN BATTERY WITH NO. 60-L

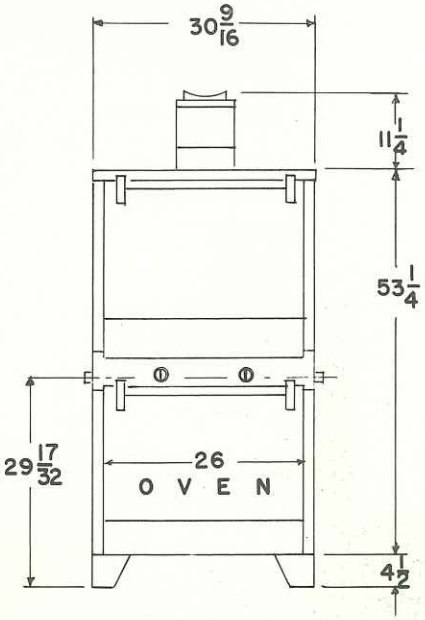

FRONT VIEW

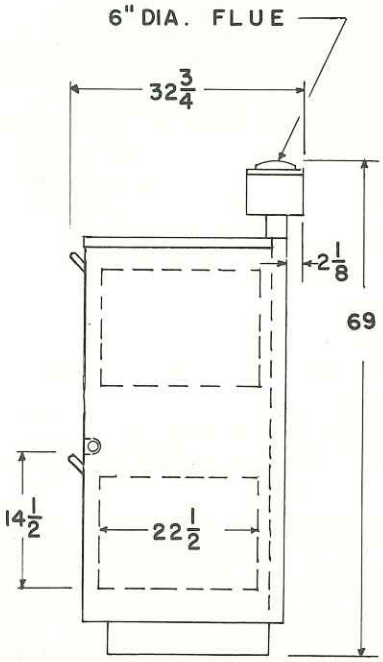

SIDE VIEW

VULCAN RESTAURANT RANGES

No. 36L-6708 SERIES
With Elevated Broiler

No. 36L-6708
BLACK BAKED ENAMEL

WITH AUTOMATIC OVEN LIGHTING
AND 100% SAFETY SHUT OFF

THE WORLD'S FINEST COOKING EQUIPMENT

- √ Six top burners
- √ Any combination of open top or hot top burners 24" or 36" griddle
- √ Large 26" oven—fully insulated—fully enameled
- √ Automatic top burner lighting
- √ Convenient front plate bar
- √ Heavy duty elevated broiler
- + Plus all the other well known features that make VULCAN the "World's Finest"

AVAILABLE IN
BLACK BAKED ENAMEL
SILVERTONE FINISH
OR
STAINLESS STEEL

The same high standard of quality materials and workmanship that has built an enviable reputation for Vulcan's heavy-duty line is upheld in the manufacture of the new Vulcan restaurant ranges.

Fast heating oven well insulated. Temperature control range from 550° to 250°. Large top cooking surface. cast iron non-clogging, efficient burners; porcelain enameled open burner sections; automatic lighters; thermostatically controlled ovens.

Elevated broiler has concealed six position raising and lowering mechanism; no sag grid; long life burner; equipped with gas heated ceramics; thickly insulated.

The new Vulcan Restaurant Range has "eye appeal" that inspires pride in the appearance of any kitchen. The new Silvertone Finish is a specially developed process for Vulcan. Also available in beautiful stainless steel or baked black enamel finishes

No. SS36L-6708
Stainless Steel Finish

Specifications

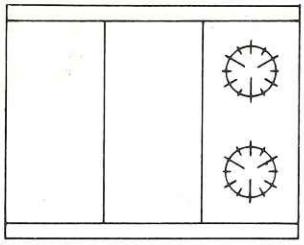

36BL-6708

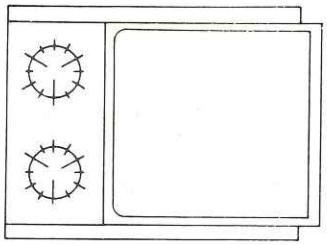

36FL-6708

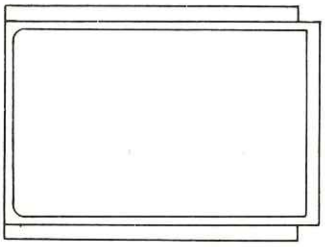

36XL-6708

Overall size	36" wide	31" deep	57⅝" high
Cooking surface	36" wide	26⅝" deep	35" high
Oven size	26" wide	22½" deep	14½" high
Elevated Broiler	34" wide	18" deep	10½" high

Range with griddle top 39" wide

1" manifold connection

Available for any type of gas, manufactured, natural, mixed or L.P.

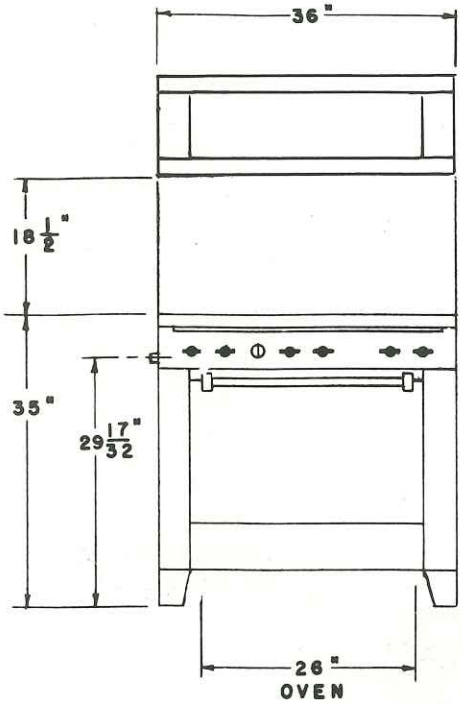

Front View

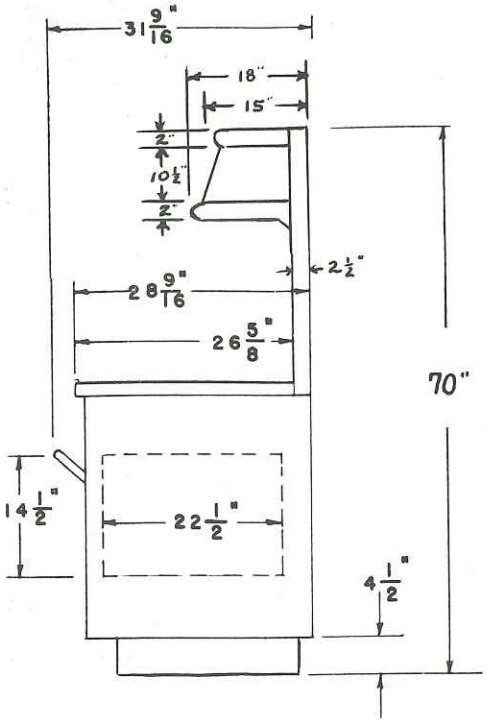

Side View

ULCAN·HART MANUFACTURING CO.

3600 NORTH POINT BOULEVARD BALTIMORE 22, MARYLAND

VULCAN DEEP FAT FRYER (GAS)

SPECIFICATIONS

No. 6294 or 6294E
FRYER

GENERAL: Body to be all welded steel construction and to be fully smooth flush surfaced. Units finished in Silvertone with polished and chrome trim to be not less than 18 ga. U. S. Standard Steel. Stainless steel units to be not less than 20 ga. U. S. Standard Steel.

KETTLE: Shall be high-speed modern Vee design without tubes to permit easy cleaning and highest production with least amount of fat. Material to be heavy polished cold rolled or stainless steel of not less than 14 ga. U. S. Standard. Extra large working area above Vee to be 13" x 16" x 5½" deep. Normal fat load of kettle to be a low 28 lbs. Kettle Vee to have 60 double type *stainless steel* fins continuously welded to its sides for maximum heat transfer and long life. Kettle sides and flue to be surrounded with heavy insulating brick to store and save heat for greatest efficiency and low cost operation. Side flues to be *stainless steel* to assure long life. Kettle top to be one piece die formed and provide extra large foam breakup area with 2" polished safety rim all around to prevent accidental push in of material or objects from adjacent units. Kettle to have front drain valve to accommodate front drainage and supplied with (2) tie-on strainer bags.

BURNER: *One* extra heavy burner of double bar type with non-clogging slotted ports for use with all gases without conversion and equipped with extra heavy *single* venturi. Burner instantly removable by simple lift out. Burner nozzle heavy brass with or without adjusting needle and equipped with ⅛" thick solid steel air shutter infinitely adjustable from full closed to wide open.

Gas supply controlled by heavy bronze ¾" union type shut-off valve arranged to permit complete disconnection of controls or manifold parts without shut-off of gas supply to unit. Burner to be lighted by simple pilot burner equipped with non-clogging slotted ports and controlled by separate 'B' valve. Manufactured and Natural gas units equipped with ¾" pressure regulator to assure even operation regardless of pressure fluctuations of supply lines.

HEAT CONTROL: Frying temperatures to be controlled by Robertshaw liquid type snap action adjustable control. Electric type equipped with indicating light optional.

SAFETY SHUTOFF VALVE: 100% safety valve automatically shuts off all gas in the event of pilot failure. Standard on L. P. gases. Optional on other gases.

BASKETS: Heavy duty double tinned mesh baskets with extra wide bottoms and extra length to permit greatest capacity frying made available by super speed of the unit.

FLUE: Fryer to be supplied with vertical flue or secret flue.

DATA

Number	6294	6294E
Overall Dimensions		
Wide	17"	17"
Deep	28¾"	28¾"
High	44"	44"
Kettle Opening		
Wide	13"	13"
Long	16"	16"

Cap. Kettle at Normal Cooking Level, 28 pounds of frying medium.

Size of Flue, 6" Collar optional.

Gas Manifold 1¼".

Burner Rating 65,000 BTU all gases. 'E' units require 110V connection for heat control and indicating light.

Deep Fat Fryer

DIMENSION DRAWINGS

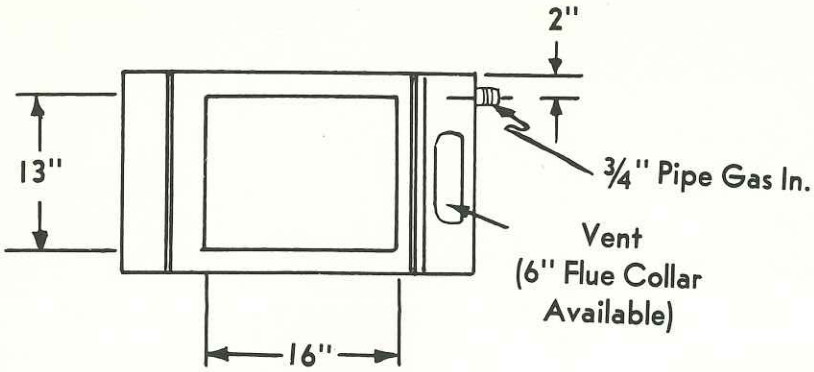

TOP VIEW

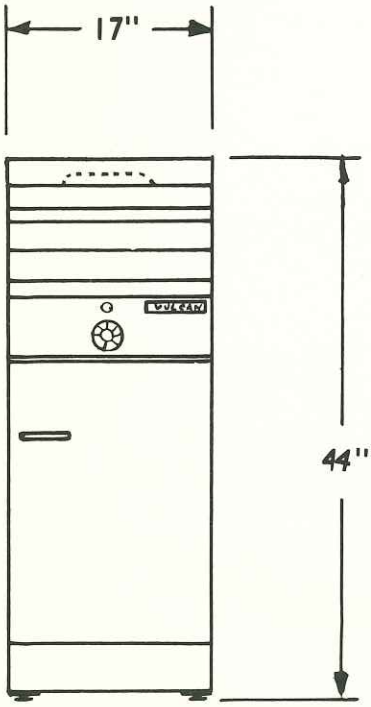

FRONT VIEW

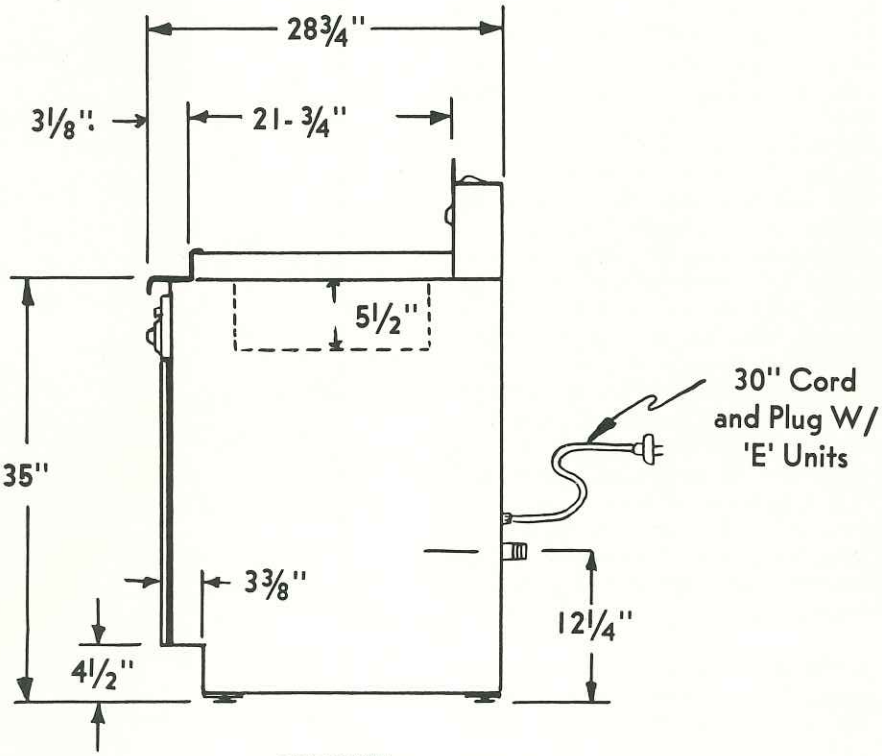

SIDE VIEW

VULCAN • HART MANUFACTURING CO.

3600 North Point Boulevard BALTIMORE 22, MARYLAND

KETTLES
(STEAM JACKETED)

The Case For VULCAN-HART KETTLES

Low Temperature Cooking For Minimum Shrinkage

Low temperature cooking has long been recognized as the way to prepare food with maximum retained flavor and nutritional value, with the most attractive appearance, and for meat and fowl with a minimum of shrinkage. For this type of cooking, Vulcan-Hart Kettles and Meat Roasters excel, offering advantages available in no other units.

Only True Full Jacketed Kettle Made

The Vulcan-Hart Kettles are the only true full jacketed kettles made. The entire surface is jacketed from the rounded top working edge to the bottom. The whole inner jacket is uniformly heated to the same controlled temperature, whether the unit be steam, gas or electrically heated.

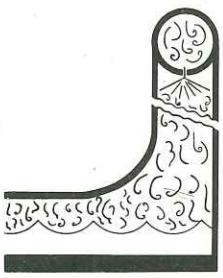

In Vulcan-Hart steam units the steam is piped directly into the tube which forms the top rim of the unit and discharged from this tube into the jacket cavity through a series of uniformly spaced holes. Compare this with other units which introduce steam at one or two points. In Vulcan-Hart units there can be no hot spots.

The Vulcan-Hart full jacketed construction coupled with its cylindrical shape provides an average of 16% more heat transfer area than other so-called full jacketed kettles of the same capacity; an average of 66% more heat transfer area than the two-thirds jacketed hemispherical kettles. This permits quick heat up in Vulcan-Hart units without the use of high pressure, high temperature steam, thus avoiding any chance of overheating the contents due to the failure of the operator to reduce the heat input when the desired cooking temperature is reached.

Meat and Fowl Retain Top Flavor

A steam pressure of 8 to 10 pounds in the jacket provides the optimum temperature for roasting meat and fowl. Note that the manufacturers of high pressure units recommend this pressure in the jacket during the cooking cycle. Roasting meats and fowl at this temperature produces the very minimum of shrinkage, thereby producing roasted meat or fowl with top flavor and nutritional value. Vulcan-Hart Meat Roasters perform better because the desired temperature is never exceeded.

Easily Adjusted to Balanced Simmer Condition

With Vulcan-Hart Kettles for stewing meats or cooking vegetables only enough water is added to provide an atmosphere of steam in the kettle. Vulcan-Hart Kettles are factory equipped with either a thermostat or simmer valve (depending on source of heat) so that heat input can be easily adjusted to a stable simmering condition. Moreover, Vulcan-Hart Kettles have a small inspection opening and cover in the main lid so that large quantities of steam from the contents need not be released by raising the main cover during cooking.

With Vulcan-Hart Kettles for cooking soup stock, soups, dried fruit, cereals, or any food which requires the addition of water only the required amount of water need be added. Additional water must only be boiled away, thus wasting fuel and steaming up the kitchen. Vulcan-Hart Kettles surpass all others in the ease of regulation to a balanced simmer condition. Low pressure operation is a big factor in making this ease of regulation possible.

Wasteful Boiling of Water Not Necessary

Vulcan-Hart Kettles have no steam vent opening in their cover as do other kettles: none is required. With Vulcan-Hart units there is no reason to wastefully boil away large quantities of water. Faster cooking does not result from vigorous boiling. Cooking time is governed by the temperature, and with water present, the temperature in the kettle cannot go above the boiling point of water at the existing atmospheric pressure.

Stainless Steel Construction Easily Cleaned

Vulcan-Hart Kettles have sanitary features which cannot be obtained in any other units. Their all stainless inside and outside construction with all seams electrically welded and ground smooth, with all surfaces ground and polished, allows no foot-hold for dirt. Every surface with which food can come in contact is of stainless material, easily accessible for cleaning. Even the interior surfaces of the removable plug draw-off faucet (safety lock prevents removal of plug except in open position) and the very short draw-off spout are so accessible that they can be visually inspected.

VULCAN-HART Kettles - Meat Roasters are Sanitary Engineered-Full Steam Jacketed

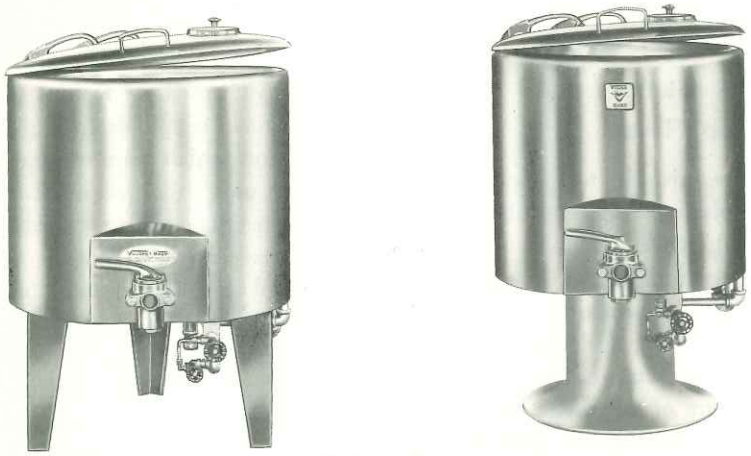

KETTLES

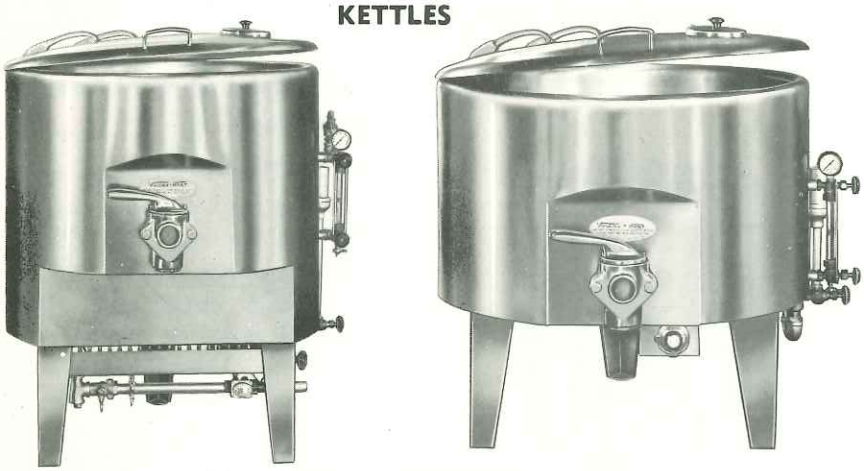

MEAT ROASTERS

For Direct Steam — Gas — Electric

Deluxe units, solid stainless inner and outer jacket, and cover. Sanitary Dairy plug type draw-off valve, steam trap assembly with check valve, steam supply valve with simmering valve, and relief valve are standard equipment, assembled to unit at factory and shipped as a complete unit ready for installation.

KETTLES

Available in the following sizes, approximate gallons: 13, 20, 30, 40, 60, 80, 100, 120. Various heights and diameters to fit every cooking need.

MEAT ROASTERS

All units come completely assembled, ready for use. Available in the following sizes, approximate gallons: 13, 20, 30, 40 and 60.

VULCAN-HART OWNER PROUD OF EQUIPMENT

One of the thousands of Vulcan-Hart equipment owners is the Lincoln State Hospital at Lincoln, Neb. Using 23 Vulcan-Hart Kettles thousands of meals are prepared daily. Because Vulcan-Hart equipment is sanitary engineered it is preferred by institutions that must maintain the ultimate in sanitation.

Because of its unique design Vulcan-Hart equipment is more easily cleaned than other equipment. And the name Vulcan-Hart assures the user that he is using the finest equipment that can be found and that it will give years of faithful service.

Sanitary Flow Line is Your Guarantee of 100% Sanitation

In the Vulcan-Hart kettles and meat roasters the draw-off valve is the low point of the seamless interior, and all lines lead to the sanitary plug type draw-off valve, all visible to the eye.

This construction serves two purposes. It not only insures perfect sanitation, but it also automatically provides a design which has greater capacity and convenience for operator because of a lower working edge.

The cover hinged at a 45° angle, when opened, leaves clear the entire top of the kettle. The complete absence of bolts, screws, and rivets, the smooth design of the cover and its hinges, the smooth lines of the kettle, the close coupled draw-off faucet with removable plug, the complete absence of corners, cracks, crevices and pockets combine to make Vulcan-Hart Kettles by far the most sanitary units available.

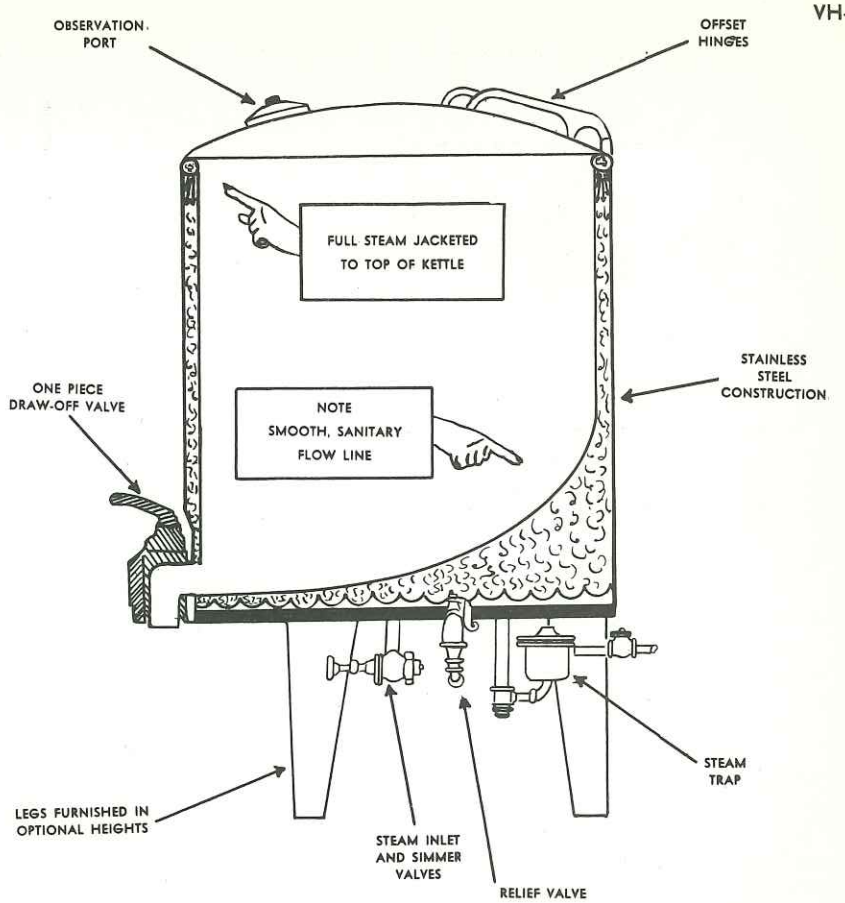

"French Drip" All Stainless Steel Coffee Urns Fully Jacketed For Direct Steam — Gas — Electric

Gas **Steam**

The urn is truly an industrial or institutional urn. It is designed to produce large quantities of coffee in a minimum length of time. It is the only coffee urn made that can be emptied in less than 5 minutes. DeLuxe units, solid stainless inner and outer jacket, and cover. Vulcan-Hart Bee-Line burner with safety pilot control, low water cut-off, and relief valve, are standard equipment, assembled to unit and shipped from factory ready for installation. Coffee producing capacity will vary according to grind of coffee, amount of coffee used, and bag displacement. Comes completely equipped in the following sizes: 40, 70, 85, 100, 125, 150 gallons approximate.

All Stainless Steel "Does All" Vapor Spray Pasteurizers Fully Jacketed — For Direct Steam or Electric

The Vulcan-Hart "Does All" Pasteurizer is the most modern, efficient, economical and practical pasteurizer available. It has demonstrated its remarkable superiority over all other makes in countless unbiased "on the job" tests. Expertly designed and skillfully fabricated, the Vulcan-Hart "Does All" is constructed of 14 gauge - 18-8 stainless steel — inside and out. It is entirely seamless . . . no bolts, rivets or screws. One-piece cover has a convenient observation hole. Gear Head motor mounted on stainless steel offset hinges provides a counter balance to keep cover open. The stainless steel propeller and shaft is removable, making replacement possible with propellers of different pitch to handle the viscosity in preparing other products such as buttermilk, heavy cream, eggnog, chocolate coating, etc. Available in the following sizes: 35, 55, 75, 95, 115, gallons approximate.

Vulcan-Hart Equipment Comes Fully Equipped

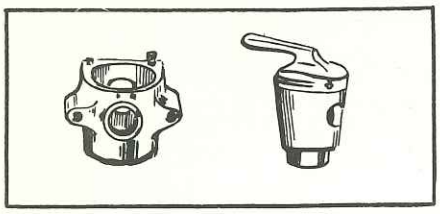

All equipment is shipped complete from factory. Steam accessories include sanitary draw-off valve, steam control valve, simmer valve, safety relief valve, thermostatic type steam trap and vacuum breaker, all assembled, ready for installation. A coffee bag ring and coffee bags and measuring rod supplied with urns.

Gas heated full steam jacketed equipment is also shipped as a complete unit, ready for installation, with sanitary draw-off valve, safety relief valve, waterlevel gauge, steam pressure gauge, and water supply line, with water fill pipe and cock and gas line control valve with pilot lighter, all assembled, with necessary fittings ready for installation.

The gas heated steam jacketed coffee urn has coffee urn bag ring, coffee bags and a coffee measuring rod. This makes a perfect installation, with all required fittings furnished.

Electric units are shipped with sanitary dairy type draw-off valve, single or 3 phase heating elements, thermostatic control, low water cutoff, and relief valve. All assembled and ready for installation.

Cover Drains Clear of Kettle

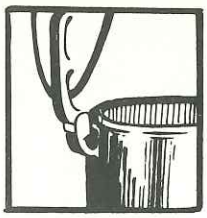

In the Vulcan-Hart equipment, the "offset" one piece cover is hinged so that all condensation drains clear of the kettle or meat roaster.

Outstanding Features of Vulcan-Hart Equipment

SEAMLESS CONSTRUCTION. The inside and outside surfaces have a smooth finish, with seams electric welded, ground and polished, allowing no foot-hold for dirt.

ONE-PIECE COVER — SEAMLESS — Having No Bolts, Screw, or Rivets. Cover is hinged at a 45° angle, with a raised handle, and observation port opening, with cover having a heat resisting bakelite knob.

SANITARY DESIGN. All surfaces visible to the eye, insuring perfect sanitation. Meets all sanitary health requirements recommended for drinking and eating establishments by the U. S. Public Health Service.

PERFECT DRAINAGE. The low point of the seamless interior is the Vulcan-Hart sanitary plug type draw-off safety valve.

DRAW-OFF VALVE. Of two castings, of Dairy-white metal, plug type, with bottom outlet. Attached to inner jacket so that the drain opening is visible to the eye.

FULL STEAM JACKETED. The entire surface is double jacketed, from the round top working edge to the bottom. This gives a 100% uniform heating surface as well as 100% economy.

THERMAL CONSTRUCTION. The full steam jacket design provides a thermal jacket insulation, making it possible to hold contents, without necessity of reheating, over a period of eight to twelve hours. In manufacturing equipment for the dairy industry our engineers perfected this feature for the holding of cultures.

SAFETY FEATURES AND ACCESSORIES. A safety lock is provided on sanitary draw-off valve, which prevents operator from removing plug except in open position. Cover is set at 45° angle, which opens away from operator. This prevents steam burns. Cover also has port-hole, through which operator can observe cooking contents, making it unnecessary to open large cover until operation is complete.

UNIFORM HEATING. Through a patented method, Vulcan-Hart Kettles and Urns have a perfect heat distribution, eliminating any hot spots. Our engineers can supply increased or decreased heating temperatures, when necessary for special processing.

A FEW VULCAN-HART INSTALLATIONS

U. S. Marine Hospital, Mobile, Ala.
Jesuit House of Studies, Spring Hill, Ala.
Coolidge Public School, Coolidge, Ariz.
Sunnyside School Cafeteria, Tucson, Ariz.
Michael-Meagher Hospital, Texarkana, Ark.
The Maestri Company, Tonitown, Ark.
University of California, Berkeley, Calif.
Rohr Aircraft Corporation, Chula Vista, Calif.
The Cheshire Academy, Cheshire, Conn.
Sagans Restaurant, Hartford, Conn.
E. I. DuPont de Nemours & Co., Newark, Del.
O'Donnell's, Washington, D. C.
Pentagon Post Restaurant, Washington, D. C.
The Boulevard Cafeteria, Miami, Fla.
Columbia Restaurant, Tampa, Fla.
Robins Air Force Base, Atlanta, Ga.
J. E. Harvey, Tallulah Falls, Ga.
Idaho State College, Pocatello, Idaho
Conrad Hilton Hotel, Chicago, Ill.
Palmer House, Chicago, Ill.
Indiana University, Bloomington, Ind.
Clarks Restaurant, South Bend, Ind.
Sorensen Cafe, Cedar Rapids, Iowa
Larned State Hospital, Larned, Kan.
Osawatomie State Hospital, Osawatomie, Kan.
Little Sisters of The Poor, Louisville, Ky.
Eastern State Teachers College, Richmond, Ky.
Beverly Country Club, Inc., New Orleans, La.
U. S. Marine Hospital, Garville, La.
Cecil Laweryson, Bingham, Maine
Naval Medical Center, Bethesda, Md.
Bowman Packing Company, Baltimore, Md.
Bella Vista Restaurant, Haverhill, Mass.
Boston Airport, Boston, Mass.
Detroit Race Track, Detroit, Mich.
Hurley Hospital, Flint, Mich.
Land O'Lakes Creameries, Olivia, Minn.
Canby Dairy, Canby, Minn.
Alexian Bros. Hospital, St. Louis, Mo.
Finlen Hotel, Butte, Mont.
Guernsey Dairy, Terry, Mont.
Lincoln State Hospital, Lincoln, Nebr.
Kellogg Company, Omaha, Nebr.
Anaconda Copper Company, Nevada.
Phillips Exeter Academy, Exeter, New Hamp.
Rockingham Park, Salem, New Hamp.
Rain or Shine Box Lunch, Newark, N. J.
St. Michaels Monastery, Union City, N. J.
Hotel Astor, New York, N. Y.
U. S. Coast Guard Base, Staten Island, N. Y.
S & W Cafeterias, Asheville, N. C.
Graves Dairy, Kernersville, N. C.
Portage Country Club, Akron, Ohio
Fred Harvey Restaurant, Cleveland, Ohio
Lipman Wolfe & Co., Portland, Ore.
Horn & Hardart Baking Co., Philadelphia, Pa.
Philadelphia Psychiatric Hospital, Philadelphia, Pa.
Howard Johnson's, Cranston, R. I.
Murphy Caterers, Providence, R. I.
Holy Rosary Mission, Pine Ridge, Dakota
Keystone School, Johnson City, Tenn.
Little Sisters of The Poor, Nashville, Tenn.
U. S. Naval Air Station, Corpus Christi, Tex.
L-C Cafeteria, Houston, Tex.
Davis County Jr. High School, Bountiful, Utah
United Air Lines, Salt Lake City, Utah
Hogate's Arlington House, Arlington, Va.
Lower Naches School, Yakima, Wash.
Olympic Memorial Hospital, Port Angeles, Wash.
Waterford Park Race Track, Chester, W. Va.
Massey Farm Dairy, Gilmer, W. Va.
Lakeland Hospital, Elkhorn, Wisc.
University of Wisconsin, Madison, Wisc.

Write for detail information and engineering data on this equipment.

VULCAN·HART MANUFACTURING CO. Baltimore • Louisville

NEW YORK • CHICAGO • LOS ANGELES • BOSTON • IN CANADA - MOFFATS LTD., WESTON, ONTARIO

COOKING

with the Vulcan-Hart Steam Jacketed Kettle

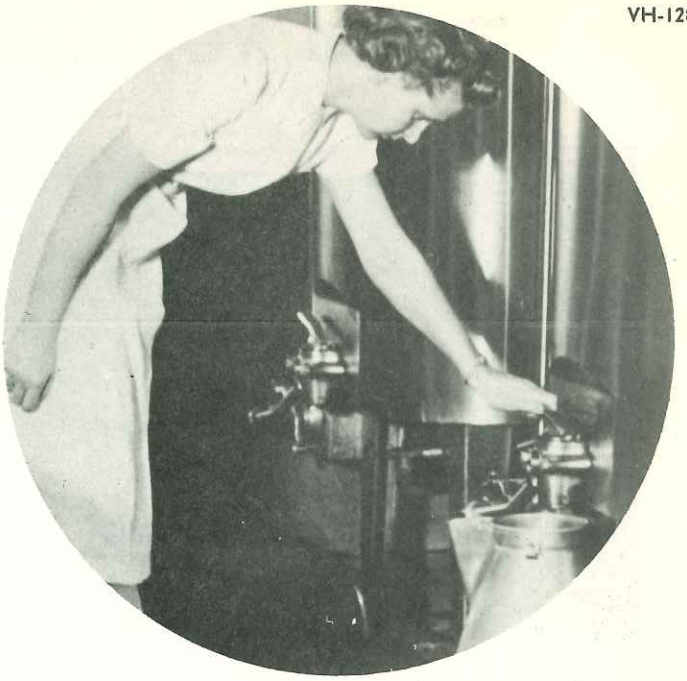

To prepare food that has good flavor, eye appeal and nutritive value is the desire of every chef or dietitian. The public demands foods with these qualifications and the VULCAN-HART Steam Jacketed Kettle assures the food shall meet these requirements.

The VULCAN-HART Steam Jacketed Kettle for cooking most any type of meats, fowl, soups, stews, sauces, shrimp, lobsters, cereals, puddings, preserves, jellies and many, many other foods.

Vegetables cooked in the VULCAN-HART Steam Jacketed Kettle retain all of their natural flavor and color.

Meats and fowl can be prepared with a minimum of shrinkage. Because of the low pressure cooking, there is no danger of scorching or burning.

There is a type and size of VULCAN-HART Steam Jacketed Kettle for every cooking need.

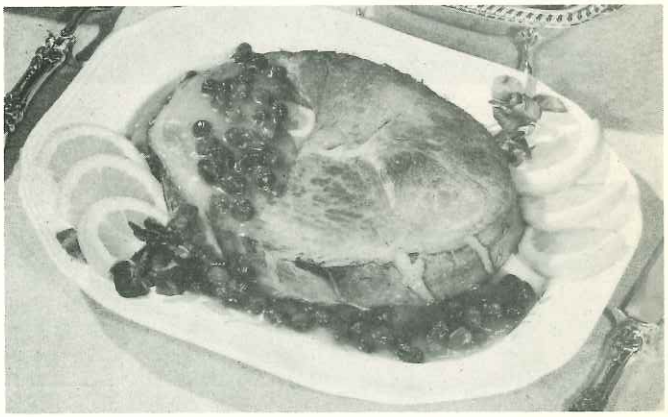

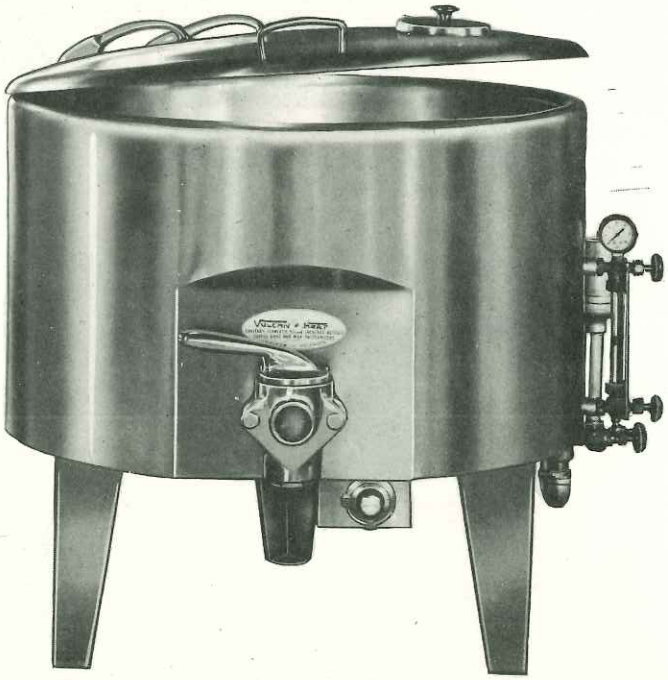

Typical VULCAN-HART Installations

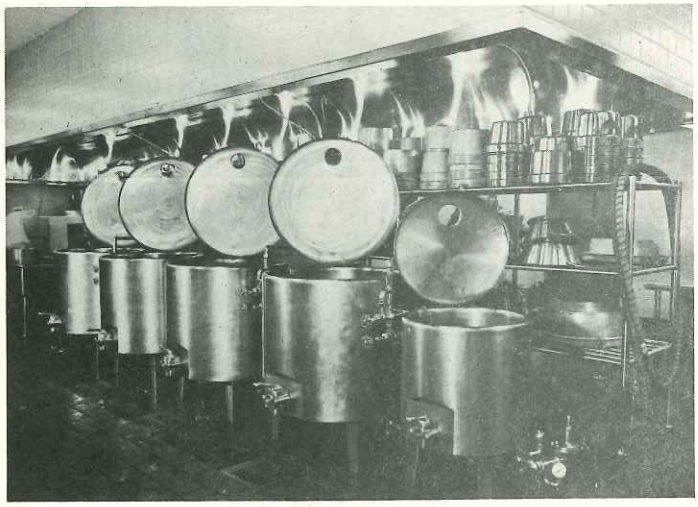

JOHN HANCOCK INSURANCE CO.
BOSTON, MASSACHUSETTS

GOODYEAR RUBBER COMPANY
AKRON, OHIO

TERRY FOODS INC.
PARK RIDGE, ILLINOIS

COOK COUNTY HOSPITAL
OAK FOREST, ILLINOIS

ST. FRANCIS CONVENT
MILWAUKEE, WISCONSIN

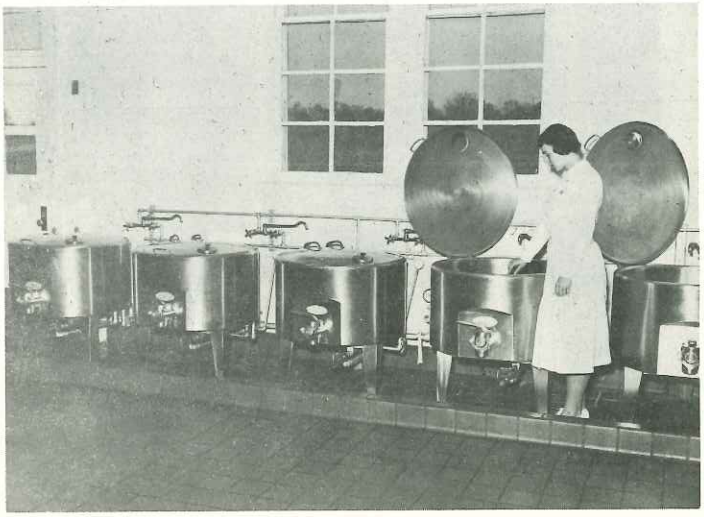

COLORADO STATE HOSPITAL
PUEBLO, COLORADO

VULCAN-HART

Stainless Steel Steam Jacketed Kettle—Meat Roaster For Steam Heat

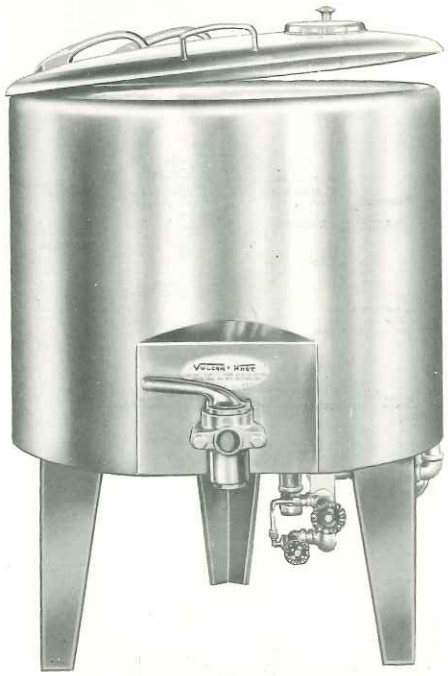

GENERAL SPECIFICATIONS

1. MATERIAL AND WORKMANSHIP

(a.) All workmanship shall be first class in every respect. The kettles shall be free from all flaws that may affect the appearance or serviceability.

(b.) Kettles shall be constructed of Type 304 corrosion resisting steel. Corrosion-resisting steel shall be of thickness called for in the specifications on the back of this page with a minus tolerance of 10% in the finished thickness.

(c.) All exposed surfaces on the outside of kettles shall have a smooth and even finish. The inside of kettle shall have a smooth finish that will not cause food to adhere.

2. DETAILED REQUIREMENTS

(a.) JACKET — The jacket shall be welded to a 1½" outside diameter stainless steel tubing which in turn is welded to the interior kettle and is ground and polished to form a smooth clean top working edge for the kettle.

(b.) STEAM INLET AND OUTLET — Steam inlet and outlet shall be fitted to the bottom of the kettle as shown on the specifications on the back of this page. The steam inlet connection shall be connected by corrosion-resisting tube to the top working edge described above, which shall be perforated around the entire top to give complete and even distribution of the steam.

(c.) DRAW-OFF ASSEMBLY — The draw-off assembly shall be 100% sanitary two-piece nickel alloy dairy type plug. The draw-off shall be attached to the interior jacket so that the drain opening is visible to the eye. A safety lock shall be provided to prevent removal of plug except in open position. The bottom of the kettle shall be sloped to the draw-off opening, opening to be not more than 1" from the draw-off valve.

(d.) SAFETY VALVE — Each kettle shall be provided with a suitable brass valve of good commercial design, which shall be set at ten pounds pressure. Because of exclusive VULCAN HART construction, VULCAN HART KETTLES operate on a fifteen pound maximum psi steam line, using ten pound relief valve.

(e.) LEGS — Legs shall be of 14 gauge stainless steel, one-piece construction, of sturdy design and welded to kettle assembly. Pedestal Base — The pedestal base shall be of 14 gauge stainless steel of welded construction with flared base and shall be welded to kettle assembly.

(f.) COVER — The cover shall be of 14 gauge one-piece stainless steel seamless construction, hinged at a 45 degree angle, with a raised handle, so that in opening, operator's arm shall not pass over the kettle opening: shall be furnished with an observation port opening with a one-piece stainless steel cover with handle.

(g.) HANDLES — See above description.

(h.) STEAM JACKETED PRESSURE — The steam jacketed kettle shall be designed for a maximum operating pressure in the jacket of ten pounds per square inch. The complete kettle shall be capable of withstanding, without weeps or leakage, a cold water pressure of twenty pounds per square inch for not less than sixty minutes.

(i.) WELDING — All welded joints shall be made with suitable welding rods and fluxes. The welding flux shall be completely removed after the welding operation. The welded joints shall be smooth and shall present a uniform finish.

(j.) FINISH — All stainless steel parts of the kettle shall be a No. 4 finish.

(k.) ACCESSORIES — Kettle shall be shipped from the factory fully equipped with all accessories, ready for installation, including a 100% sanitary draw-off valve, steam line control valve, simmering valve, vacuum breaking check valve, thermostatic steam trap and approved ten pound safety relief valve, all assembled to kettle.

SPECIFICATIONS: Kettle, For Steam Heat, Fully Jacketed, Vulcan-Hart (Parker)

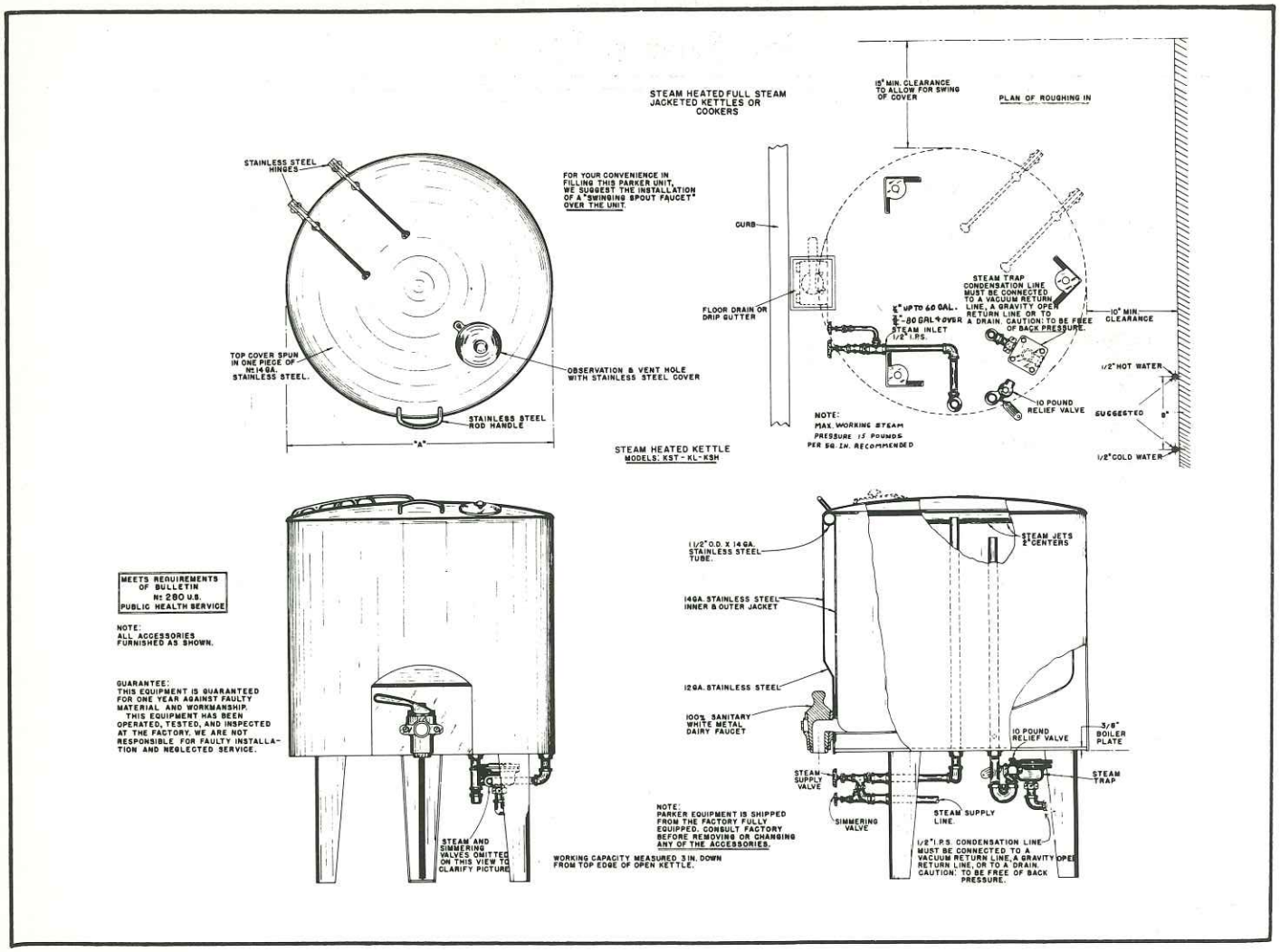

DETAILED SPECIFICATIONS

Model No.	Working Capacity In Gallons*	Full Capacity In Gallons	Draw Off Valve	Steam Supply Valve	Overall Height	Dimensions In Inches: Outside Diameter	Inside Diameter	Clearance Under Draw Off	Crated Weight Lbs.
STANDARD TYPE									
KST—40	35	40	1½"	½"	46¾"	25"	22"	14"	280
KST—60	50	56	1½"	½"	46¾"	29"	26"	14"	335
KST—80	65	74	1½"	¾"	46¾"	33"	30"	14"	410
KST—100	82	94	2"	¾"	48¾"	36½"	33½"	14"	495
KST—120	105	117	2"	¾"	54¾"	36½"	33½"	14"	525
KST—140	128	140	2"	¾"	60¾"	36½"	33½"	14"	550
LOW TYPE									
KL—20	17	20	1½"	½"	40¾"	20½"	18"	14"	190
KL—30	25	30	1½"	½"	40¾"	25"	22"	14"	240
KL—40	36	42	1½"	½"	40¾"	29"	26"	14"	310
KL—60	46	55	1½"	½"	40¾"	33"	30"	14"	370
KL—80	60	70	2"	¾"	42¾"	36½"	33½"	14"	430
SHALLOW TYPE									
KSH—13	10	13	1½"	½"	34¾"	20½"	18"	14"	175
KSH—20	15	20	1½"	½"	34¾"	25"	22"	14"	230
KSH—30	22	29	1½"	½"	34¾"	29"	26"	14"	310
KSH—40	29	37	1½"	½"	34¾"	33"	30"	14"	400
KSH—60	38	48	2"	½"	36¾"	36½"	33½"	14"	420
MEAT ROASTER									
KSH—13M	10	13	2"	½"	34¾"	20½"	18"	14"	185
KSH—20M	15	20	2"	½"	34¾"	25"	22"	14"	240
KSH—30M	22	29	2"	½"	34¾"	29"	26"	14"	320
KSH—40M	29	37	2"	½"	34¾"	33"	30"	14"	410
KSH—60M	38	48	2"	½"	36¾"	36½"	33½"	14"	430

VULCAN-HART

Stainless Steel Steam Jacketed Coffee Urn For Steam Heat

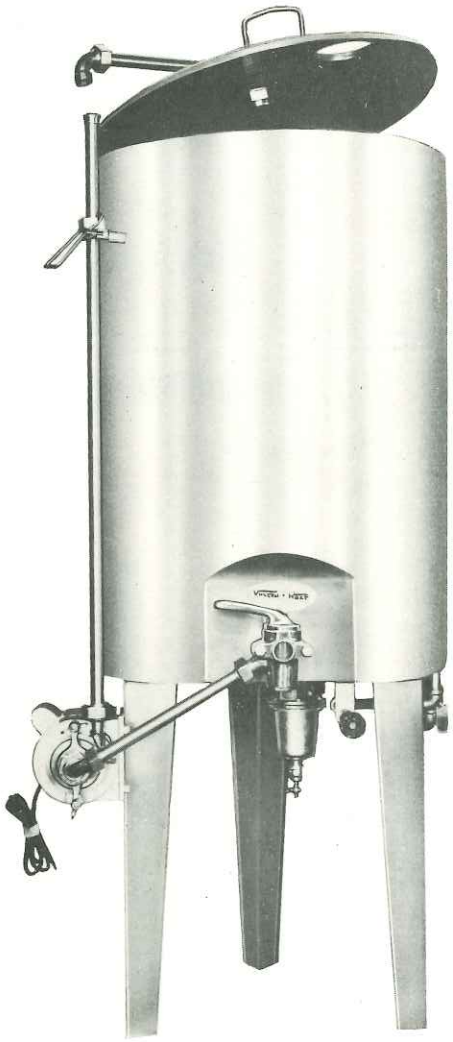

GENERAL SPECIFICATIONS

1. MATERIAL AND WORKMANSHIP
   - (a.) All workmanship shall be first class in every respect. The urn shall be free from all flaws that may affect the appearance or serviceability.
   - (b.) The coffee urn shall be constructed of Type 304 corrosion-resisting steel. Corrosion-resisting steel shall be of the thickness called for in the specifications on the back of this page with a minus tolerance of 10% in the finished thickness.
   - (c.) All exposed surfaces on the inside and outside of urn shall have a smooth and even finish.

2. DETAILED REQUIREMENTS
   - (a.) JACKET — The jacket shall be welded to a 1½" outside diameter stainless steel tubing which in turn is welded to the interior urn and is ground and polished to form a smooth clean top working edge for the urn.
   - (b.) STEAM INLET AND OUTLET — Steam inlet and outlet shall be fitted to the bottom of the urn, as shown in attached drawings. The steam inlet connection shall be connected by corrosion-resisting tube to the top working edge tube described above, which shall be perforated around the entire top to give complete and even distribution of the steam.
   - (c.) DRAW-OFF ASSEMBLY — The draw-off assembly shall be 100% sanitary two-piece nickel alloy dairy type plug with side outlet. The draw-off shall be attached to interior jacket so that the drain opening is visible to the eye. A safety lock shall be provided to prevent removal of plug except in open position. The bottom of the urn shall be sloped to the draw-off opening, opening to be not more than 1" from the draw-off valve.
   - (d.) RECIRCULATING SYSTEM — A white metal sanitary pump with integrally mounted motor shall have its inlet piped to the side outlet of the draw-off faucet and shall have its outlet piped to the spray head at the center of the cover. Piping shall be of stainless steel with approved sanitary type fittings. Pump and piping shall be demountable to permit cleaning.
   - (e.) TIMER — Recirculating pump motor shall be connected to power source through a separately mounted timing switch furnished with unit.
   - (f.) SAFETY VALVE — Each urn shall be provided with a suitable brass valve of good commercial design, which shall be set at ten pounds pressure. Because of exclusive construction, Vulcan-Hart Urns operate on a fifteen pound maximum psi steam line, using ten pound relief valve.
   - (g.) LEGS — Legs shall be of 14 gauge stainless steel, one-piece construction, of sturdy design and welded to assembly.
   - (h.) COVER — The cover shall be of 14 gauge one-piece stainless steel seamless construction, hinged at a 45 degree angle, with a raised handle, so that in opening, operator's arm shall not pass over opening; shall be furnished with an observation port opening with a one-piece stainless steel cover with handle.
   - (i.) HANDLES — See above description.
   - (j.) STEAM JACKETED PRESSURE — The steam jacketed urn shall be designed for a maximum operating pressure in the jacket of ten pounds per square inch. The complete urn shall be capable of withstanding, without weeps or leakage, a cold water pressure of twenty pounds per square inch for not less than sixty minutes.
   - (k.) WELDING — All welded joints shall be made with suitable welding rods and fluxes. The welding flux shall be completely removed after the welding operation. The welded joints shall be smooth and shall present a uniform finish.
   - (l.) FINISH — All stainless steel parts of the urn shall be a No. 4 finish.
   - (m.) ACCESSORIES — Coffee Urn shall be shipped from factory fully equipped with all accessories, ready for installation, including a 100% sanitary draw-off valve, steam control valve, vacuum breaking check valve, thermostatic steam trap, approved ten pound relief valve, recirculating pump with timing switch and coffee bag holder with two coffee bags.

SPECIFICATIONS: Coffee Urn, For Steam Heat, Fully Jacketed, Vulcan-Hart (Parker)

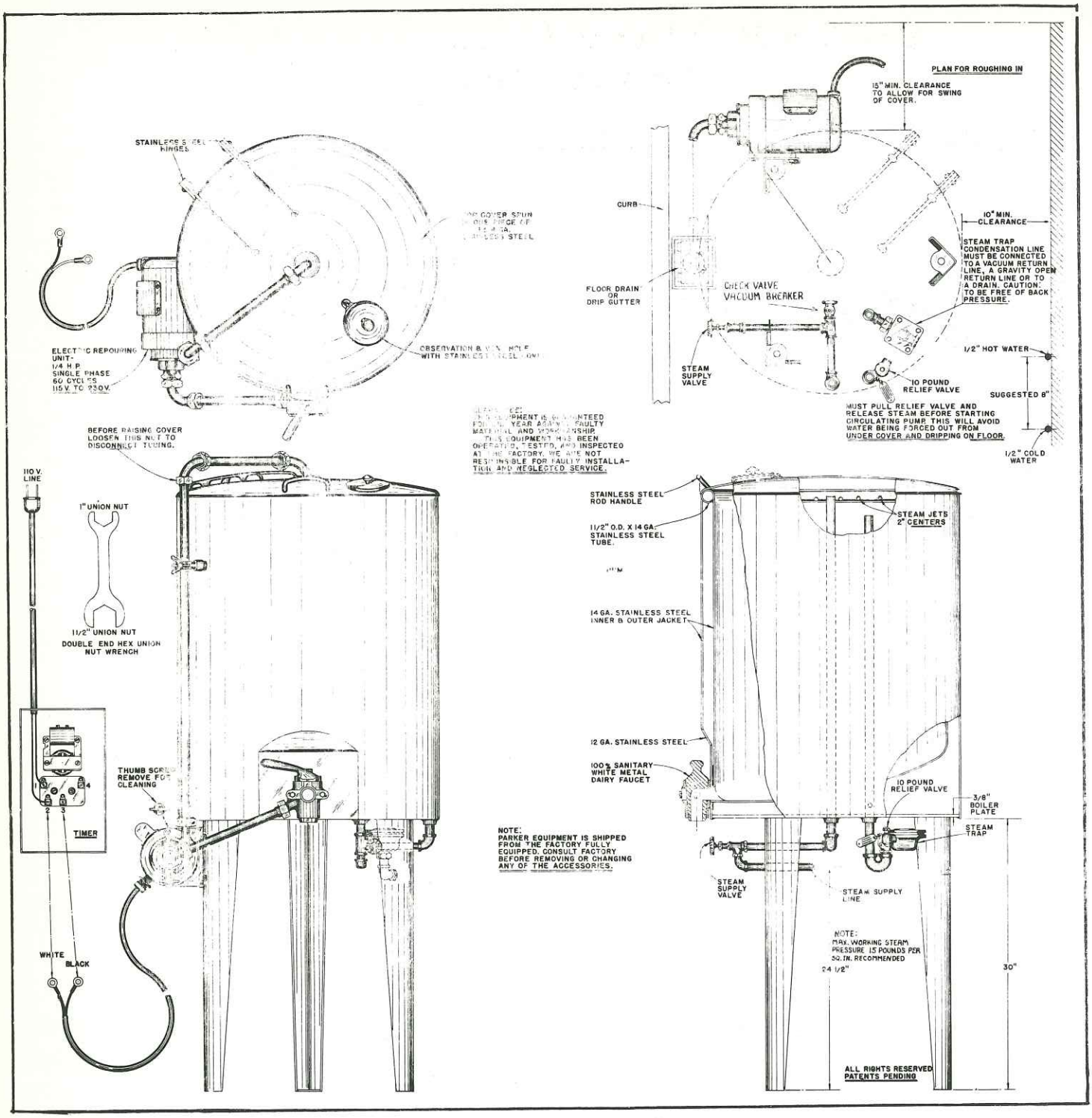

DETAILED SPECIFICATIONS

Model No.	Working Capacity Gallons	Full Capacity Gallons	Draw Off Valve	Dimensions In Inches: Overall Height	Outside Diameter	Inside Diameter	Clearance Under Draw Off	Steam Supply Line	Crated Weight Lbs.
CUER-40	30.2	40.1	1½"	62"	25"	22"	30"	½"	425
CUER-70	56.2	70.0	1½"	68"	29"	26"	30"	½"	475
CUER-85	70.0	83.8	1½"	74"	29"	26"	30"	¾"	500
CUER-100	83.8	97.6	1½"	80"	29"	26"	30"	¾"	550
CUER-125	91.4	109.7	1½"	74"	33"	30"	30"	¾"	700
CUER-150	109.1	139.6	1½"	74"	36½"	33½"	30"	¾"	800

ALL VULCAN-HART KETTLES ARE UNCONDITIONALLY GUARANTEED FOR ONE YEAR

VULCAN-HART

Stainless Steel Steam Jacketed Kettle—Meat Roaster For Gas Heat

GENERAL SPECIFICATIONS

1. MATERIAL AND WORKMANSHIP

(a.) All workmanship shall be first class in every respect. The kettles shall be free from all flaws that may affect the appearance or serviceability.

(b.) Kettles shall be constructed of Type 304 corrosion resisting steel. Corrosion resisting steel shall be the minimum thickness called for on the back of this page with a plus or minus tolerance of 10% in the finished thickness.

(c.) All exposed surfaces on the outside of kettles shall have a smooth and even finish. The inside of kettles shall have a smooth finish that will not cause food to adhere.

2. DETAILED REQUIREMENTS

(a.) JACKET — The jacket shall be welded to a 1½" outside diameter stainless steel tubing which in turn is welded to the interior kettle and is ground and polished to form a smooth clean top working edge for the kettle.

(b.) BURNER — Unit shall be equipped with a multi-jet Bunsen type dual burner, consisting of separately controlled main burner for quick heat-up and separately controlled simmering burner for steady operating conditions.

(c.) DRAW-OFF ASSEMBLY — The draw-off assembly shall be 100% sanitary two-piece nickel alloy dairy type plug. The draw-off shall be attached to interior jacket so that the drain opening is visible to the eye. A safety lock shall be provided to prevent removal of plug except in open position. The bottom of the kettle shall be sloped to the draw-off opening, opening to be not more than 1" from the draw-off valve.

(d.) SAFETY VALVE — Each kettle shall be provided with a suitable brass valve of good commercial design, which shall be set at 10 pounds pressure.

(e.) LEGS — Legs shall be of 14 gauge stainless steel, one-piece construction, of sturdy design and welded to kettle assembly.

(f.) COVER — The cover shall be of 14 gauge one-piece stainless steel seamless construction, hinged at a 45 degree angle, with a raised handle, so that in opening, operator's arm shall not pass over kettle opening: shall be furnished with an observation port opening with a one-piece stainless steel cover with handle.

(g.) HANDLES — See above description.

(h.) STEAM JACKETED PRESSURE — The steam jacketed kettle shall be designed for a maximum operating pressure in the jacket of ten pounds per square inch. The complete kettle shall be capable of withstanding, without weeps or leakage, a cold water pressure of twenty pounds per square inch for not less than sixty minutes.

(i.) WELDING — All welded joints shall be made with suitable welding rods and fluxes. The welding flux shall be completely removed after the welding operation. The welded joints shall be smooth and shall present a uniform finish.

(j.) FINISH — All stainless steel parts of the kettle shall be a No. 4 finish.

(k.) ACCESSORIES — Kettle shall be shipped from the factory fully equipped with all accessories, ready for installation, including a 100% sanitary draw-off valve, main burner control valve, simmering burner control valve, safety pilot with 100% safety shut-off valve operating in conjunction with a low water cut-off, water level gauge glass, steam pressure gauge, water fill inlet and valve and gas pressure regulator (except L P G units).

SPECIFICATIONS: Kettle, Meat Roaster, For Gas Heat, Fully Jacketed, Vulcan-Hart (Parker)

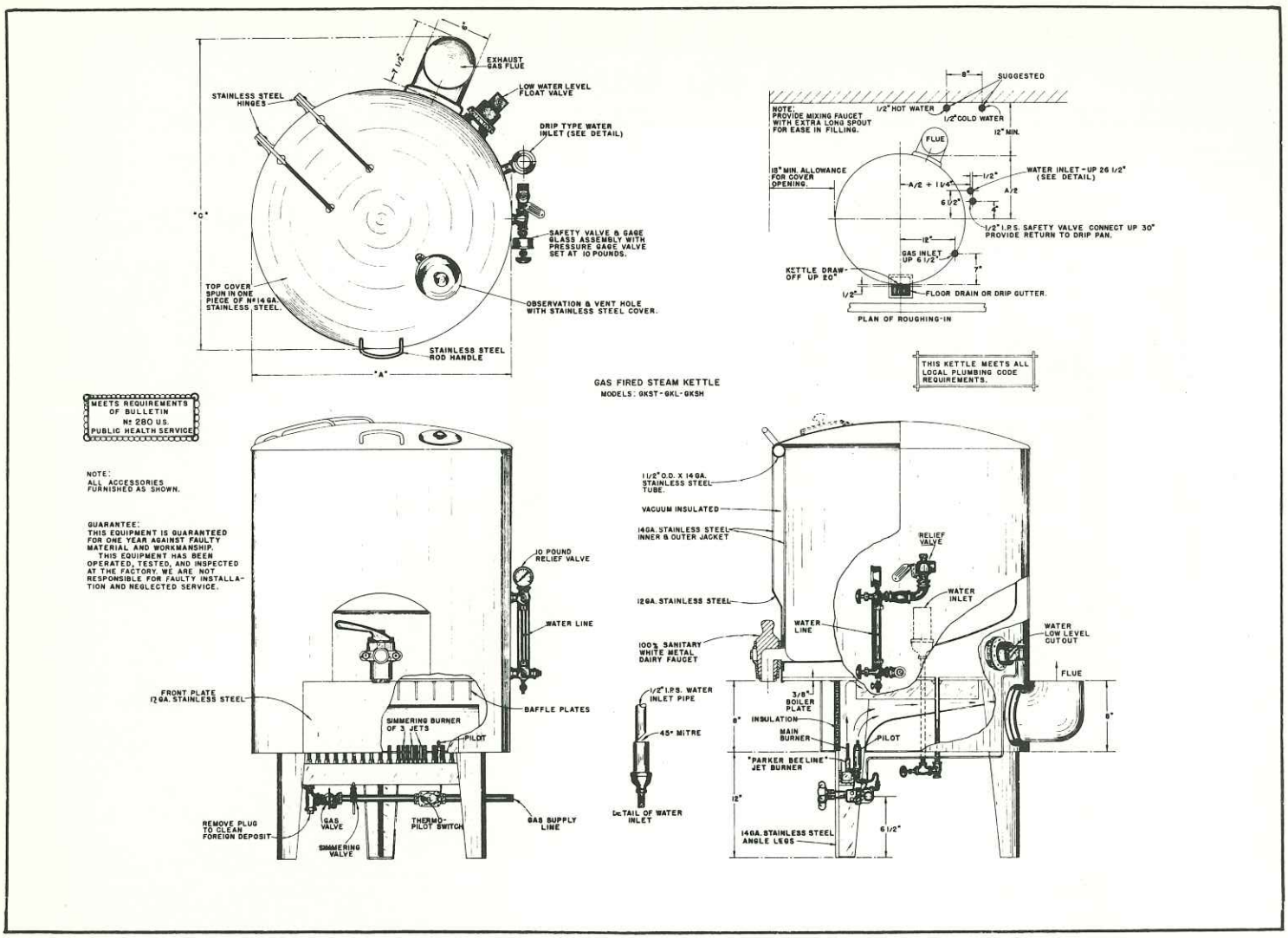

DETAILED SPECIFICATIONS

Model No.	Working Capacity Gallons	Full Capacity Gallons	Draw Off Valve	Dimensions In Inches: Overall Height	Outside Diameter	Inside Diameter	Clearance Under Draw Off	BTU's Per Hour	Gas Supply Line	Crated Weight Lbs.
STANDARD TYPE										
GKST-40	35.2	40.1	1½"	52¾"	25"	22"	20"	57,600	⅜"	340
GKST-60	49.4	56.3	1½"	52¾"	29"	26"	20"	70,400	½"	445
GKST-80	64.5	73.7	1½"	52¾"	33"	30"	20"	83,200	¾"	525
GKST-100	82.4	93.8	1½"	54¾"	36½"	33½"	20"	96,000	¾"	645
LOW TYPE										
GKL-20	16.5	19.8	1½"	46¾"	20½"	18"	20"	44,800	⅜"	265
GKL-30	25.3	30.2	1½"	46¾"	25"	22"	20"	57,600	⅜"	325
GKL-40	35.6	42.5	1½"	46¾"	29"	26"	20"	70,400	½"	410
GKL-60	46.2	55.4	1½"	46¾"	33"	30"	20"	83,200	¾"	510
GKL-80	59.5	69.9	2"	48¾"	36½"	33½"	20"	96,000	¾"	625
SHALLOW TYPE										
GKSH-7	4.0	7.0	1½"	34¾"	20½"	18"	20"	44,800	⅜"	175
GKSH-13	10.2	13.4	1½"	40¾"	20½"	18"	20"	44,800	⅜"	275
GKSH-20	14.9	20.4	1½"	40¾"	25"	22"	20"	57,600	⅜"	330
GKSH-30	21.5	28.7	1½"	40¾"	29"	26"	20"	70,400	½"	385
GKSH-40	28.7	37.0	1½"	40¾"	33"	30"	20"	83,200	¾"	425
GKSH-60	37.9	48.0	2"	42¾"	36½"	33½"	20"	96,000	¾"	510
MEAT ROASTER										
GKSHM-7	4.0	7.0	2"	36¾"	20½"	18"	20"	44,800	⅜"	265
GKSHM-13	10.2	13.4	2"	42¾"	20½"	18"	20"	44,800	⅜"	285
GKSHM-20	14.9	20.4	2"	42¾"	25"	22"	20"	57,600	⅜"	330
GKSHM-30	21.5	28.7	2"	42¾"	29"	26"	20"	70,400	½"	375
GKSHM-40	28.7	37.0	2"	42¾"	33"	30"	20"	83,200	¾"	475
GKSHM-60	37.9	48.0	2"	42¾"	36½"	33½"	20"	96,000	¾"	515

***Working Capacity Measured 3" From Working Edge**

VULCAN-HART

Stainless Steel Steam Jacketed Coffee Urn For Gas Heat

GENERAL SPECIFICATIONS

1. MATERIAL AND WORKMANSHIP

(a.) All workmanship shall be first class in every respect. The urns shall be free from all flaws that may affect the appearance or serviceability.

(b.) Urns shall be constructed of Type 304 corrosion-resisting steel. Corrosion-resisting steel shall be the minimum thickness called for on the back of this page with minus tolerance of 10% in the finished thickness.

(c.) All exposed surfaces both on the inside and outside of urns shall have a smooth and even finish.

2. DETAILED REQUIREMENTS

(a.) JACKET — The jacket shall be welded to a 1½" outside diameter stainless steel tubing which in turn is welded to the interior urn and is ground and polished to form a smooth clean top working edge for the urn.

(b.) BURNER — Unit shall be equipped with a multi-jet Bunsen type burner.

(c.) DRAW-OFF ASSEMBLY — The draw-off assembly shall be 100% sanitary two-piece nickel alloy dairy type plug with side outlet. The draw-off shall be attached to interior jacket so that the drain opening is visible to the eye. A safety lock shall be provided to prevent removal of plug except in open position. The bottom of the urns shall be sloped to the draw-off opening, opening to be not more than 1" from the draw-off valve.

(d.) RECIRCULATING SYSTEM — A white metal sanitary pump with integrally mounted motor shall have its inlet piped to the side outlet of the draw-off faucet and shall have its outlet piped to the spray head at the center of the cover. Piping shall be of stainless steel with approved sanitary type fittings. Pump and piping shall be demountable to permit cleaning.

(e.) TIMER — Recirculating pump motor shall be connected to power source through a separately mounted timing switch furnished with unit.

(f.) SAFETY VALVE — Each urn shall be provided with a suitable brass valve of good commercial design, which shall be set at ten pounds pressure.

(g.) LEGS — Legs shall be of 14 gauge stainless steel, one-piece construction, of sturdy design and welded to urn assembly.

(h.) COVER — The cover shall be of 14 gauge one-piece stainless steel seamless construction, hinged at a 45 degree angle, with a raised handle, so that in opening, operator's arm shall not pass over urn opening; shall be furnished with an observation port opening with a one-piece stainless steel cover with handle.

(i.) HANDLES — See above description.

(j.) STEAM JACKETED PRESSURE — The steam jacketed urns shall be designed for a maximum operating pressure in the jacket of ten pounds per square inch. The complete urn shall be capable of withstanding, without weeps or leakage, a cold water pressure of twenty pounds per square inch for not less than sixty minutes.

(k) WELDING — All welded joints shall be made with suitable welding rods and fluxes. The welding flux shall be completely removed after the welding operation. The welded joints shall be smooth and shall present a uniform finish.

(l.) FINISH — All stainless steel parts of the urn shall be a No. 4 finish.

(m.) ACCESSORIES — Coffee Urn shall be shipped from factory fully equipped with all accessories, ready for installation, including a 100% sanitary draw-off valve, main burner and control valve, safety pilot with 100% safety shut-off valve operating in conjunction with a low water cut-off, water level gauge glass, steam pressure gauge, approved ten pound safety relief valve, water fill inlet and valve, gas pressure regulator (except L P G units), recirculating pump with timing switch, and coffee bag holder with two coffee bags.

SPECIFICATIONS: Coffee Urn, For Gas Heat, Fully Jacketed, Vulcan-Hart (Parker)

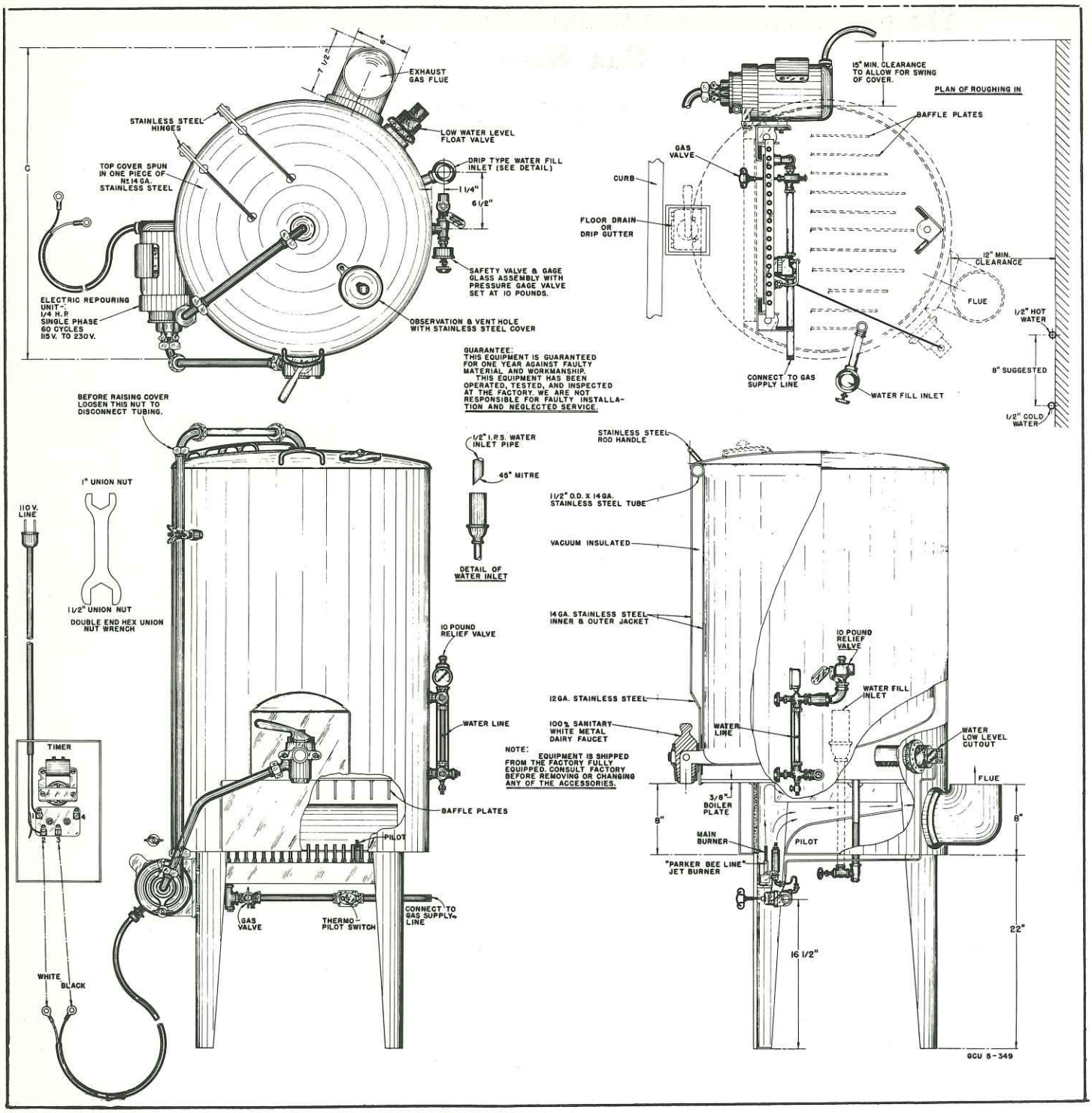

DETAILED SPECIFICATIONS

Model No.	Working Capacity Gallons	Full Capacity Gallons	Draw Off Valve	Overall Height	Dimensions In Inches: Outside Diameter	Dimensions In Inches: Inside Diameter	Clearance Under Draw Off	Gas Supply Line	BTU's Per Hour	Crated Weight Lbs.
GCUER-40	30.2	40.1	1½"	62"	25"	22"	30"	⅜"	57,600	490
GCUER-70	56.2	70.0	1½"	68"	29"	26"	30"	½"	70,400	550
GCUER-85	70.0	83.8	1½"	74"	29"	26"	30"	½"	70,400	650
GCUER-100	83.8	97.6	1½"	80"	29"	26"	30"	½"	70,400	700
GCUER-125	91.4	109.7	1½"	74"	33"	30"	30"	¾"	83,200	750
GCUER-150	109.1	139.6	1½"	74"	36½"	33½"	30"	¾"	96,000	800

VULCAN-HART

Stainless Steel Steam Jacketed Kettle—Meat Roaster For Electric Heat

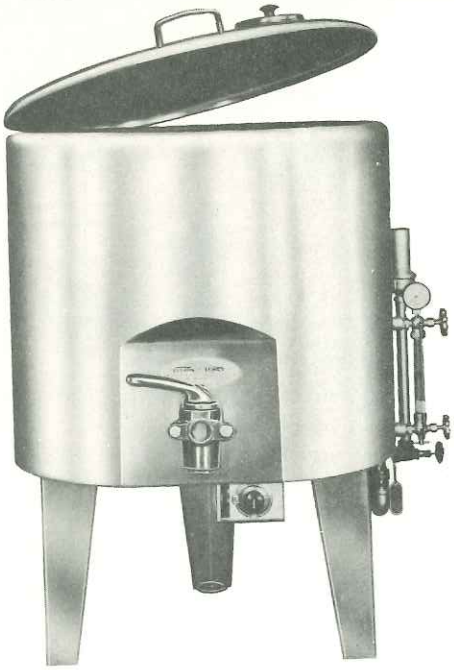

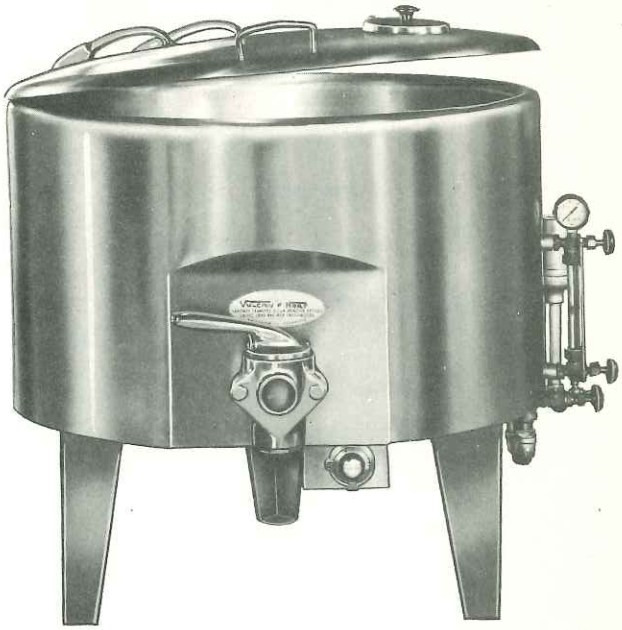

GENERAL SPECIFICATIONS

1. MATERIAL AND WORKMANSHIP

(a.) All workmanship shall be first class in every respect. The kettles shall be free from all flaws that may affect the appearance or serviceability.

(b.) Kettles shall be constructed of Type 304 corrosion resisting steel. Corrosion resisting steel shall be the minimum thickness called for in specifications on the back of this page plus or minus tolerance of 10% in the finished thickness.

(c.) All exposed surfaces on the outside of kettles shall have a smooth and even finish. The inside of kettles shall have a smooth finish that will not cause food to adhere.

2. DETAILED REQUIREMENTS

(a.) JACKET — The jacket shall be welded to a 1½" outside diameter stainless steel tubing which in turn is welded to the interior kettle and is ground and polished to form a smooth clean top working edge for the kettle.

(b.) ELECTRIC HEATING ELEMENT — The electric heating element shall be dual immersion type. May be had single or three phase, 208 Volt or 230 Volt.

(c.) THERMOSTATIC CONTROL — Thermostatic control shall be of the variable setting, hydraulic type. The thermostatic switch shall control the magnet coil circuit of the magnetic contactor through which the electric elements are connected to the power supply.

(d.) DRAW-OFF ASSEMBLY — The draw-off assembly shall be 100% sanitary two-piece nickel alloy dairy type plug. The draw-off shall be attached to interior jacket so that the drain opening is visible to the eye. A safety lock shall be provided to prevent removal of plug except in open position. The bottom of the kettle shall be sloped to the draw-off opening, opening to be not more than 1" from the draw-off valve.

(e.) SAFETY VALVE — Each kettle shall be provided with a suitable brass valve of good commercial design, which shall be set at ten pounds pressure.

(f.) LEGS — Legs shall be of 14 gauge stainless steel, one-piece construction, of sturdy design and welded to kettle assembly. Pedestal Base — The pedestal base shall be of 14 gauge stainless steel of welded construction with flared base and shall be welded to the kettle assembly.

(g.) COVER — The cover shall be of 14 gauge one-piece stainless steel seamless construction, hinged at a 45 degree angle, with a raised handle, so that in opening, operator's arm shall not pass over the kettle opening: shall be furnished with an observation port opening with a one-piece stainless steel cover with handle.

(h.) HANDLES — See above description.

(i.) STEAM JACKETED PRESSURE — The steam jacketed kettle shall be designed for a maximum operating pressure in the jacket of ten pounds per square inch. The complete kettle shall be capable of withstanding, without weeps or leakage, a cold water pressure of twenty pounds per square inch for not less than sixty minutes.

(j.) WELDING — All welded joints shall be made with suitable welding rods and fluxes. The welding flux shall be completely removed after the welding operation. The welded joints shall be smooth and shall present a uniform finish.

(k.) FINISH — All stainless steel parts of the kettle shall be a No. 4 finish.

(l.) ACCESSORIES — Kettle shall be shipped from factory fully equipped with all accessories ready for installation, including a 100% sanitary draw-off valve, water level gauge with steam pressure indicator, water fill inlet and valve, dual heating elements, terminal box, magnetic contactor (to be separately mounted), thermostat, low water cut-off with six foot length of flexible conduit containing control circuit wires.

SPECIFICATIONS: Kettle, Meat Roaster, For Electric Heat, Fully Jacketed, Vulcan-Hart (Parker)

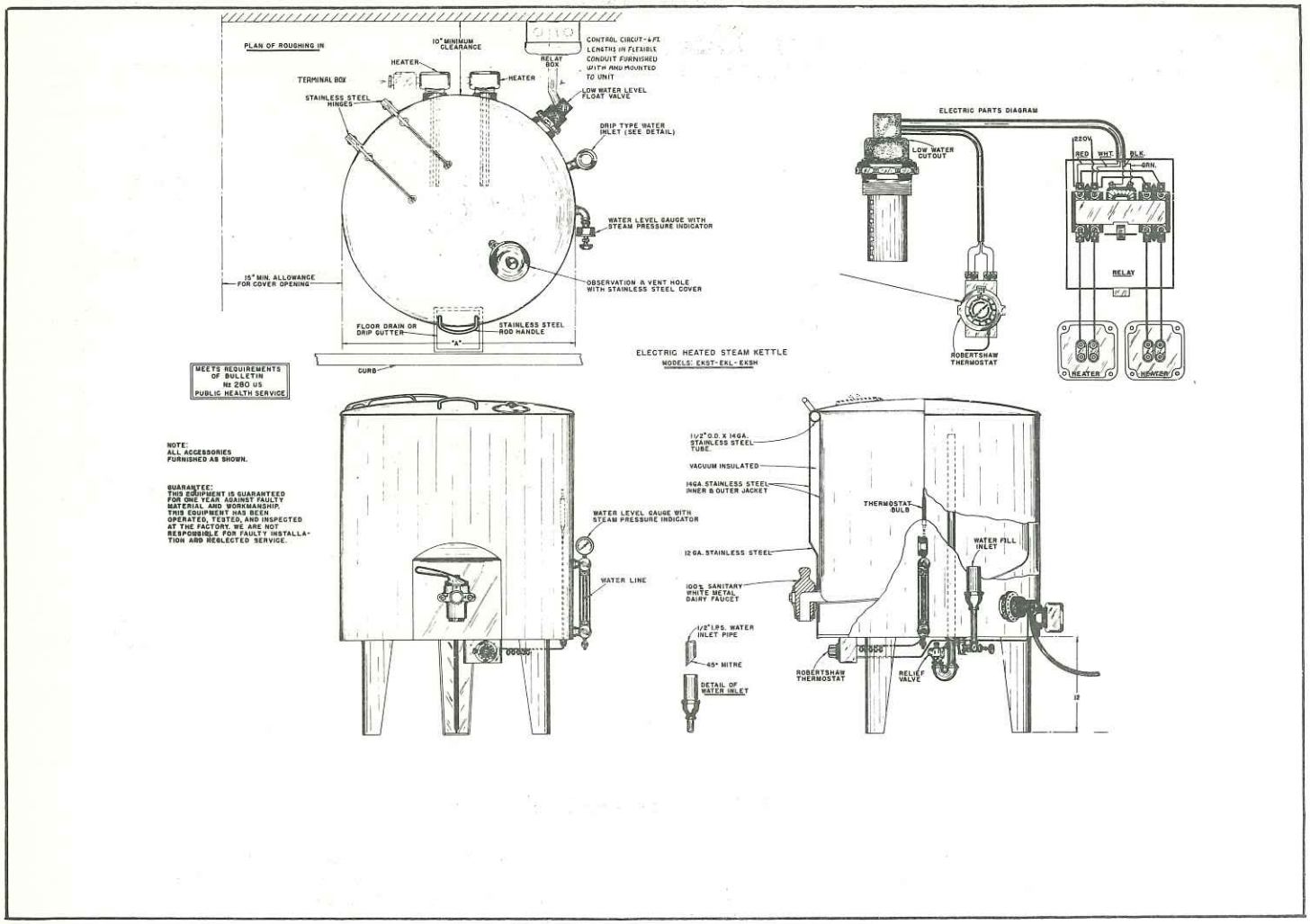

DETAILED SPECIFICATIONS

Model No. And Approximate Capacity In Gallons	Working Capacity In Gallons*	Wattage	Draw Off Valve	Overall Height	Dimensions In Inches: Outside Diameter	Dimensions In Inches: Inside Diameter	Clearance Under Draw Off	Crated Weight Lbs.
STANDARD TYPE								
EKST—40	35	10,000	1½"	46¾"	25"	22"	14"	315
EKST—60	50	12,000	1½"	46¾"	29"	26"	14"	375
EKST—80	65	12,000	1½"	46¾"	33"	30"	14"	425
EKST—100	82	12,000	2"	46¾"	36½"	33½"	14"	525
LOW TYPE								
EKL—20	17	10,000	1½"	40¾"	20½"	18"	14"	225
EKL—30	25	10,000	1½"	40¾"	25"	22"	14"	290
EKL—40	36	10,000	1½"	40¾"	29"	26"	14"	340
EKL—60	46	12,000	1½"	40¾"	33"	30"	14"	400
EKL—80	60	12,000	2"	40¾"	36½"	33½"	14"	440
SHALLOW TYPE								
EKSH—13	10	10,000	1½"	34¾"	20½"	18"	14"	250
EKSH—20	15	10,000	1½"	34¾"	25"	22"	14"	275
EKSH—30	22	10,000	1½"	34¾"	29"	26"	14"	325
EKSH—40	29	10,000	1½"	34¾"	33"	30"	14"	410
EKSH—60	38	12,000	2"	34¾"	36½"	33½"	14"	450
MEAT ROASTER								
EKSH—13 M	10	10,000	2"	34¾"	20½"	18"	14"	260
EKSH—20 M	15	10,000	2"	34¾"	25"	22"	14"	285
EKSH—30 M	22	10,000	2"	34¾"	29"	26"	14"	335
EKSH—40 M	29	10,000	2"	34¾"	33"	30"	14"	420
EKSH—60 M	38	12,000	2"	34¾"	36½"	33½"	14"	450

*Working Capacity Measured 3" From Working Edge

VULCAN·HART

TABLE TYPE TILTING KETTLE

10 QT. AND 20 QT. CAPACITIES

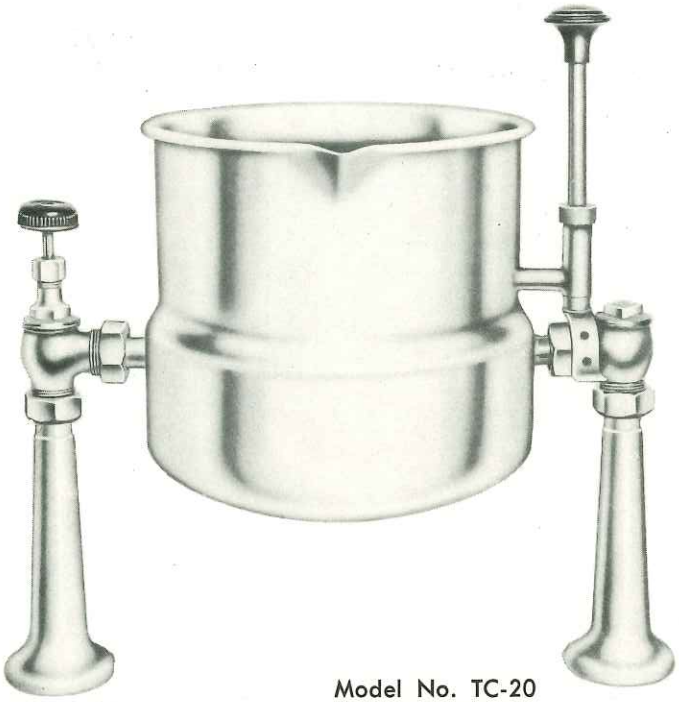

Model No. TC-20
20 Qt. Capacity

Smarter Design **Greater Flexibility** **More Value**

- Direct Steam Operated
- Steam Jacketed
- Stainless Steel
- One-Piece Welded Construction
- Sanitary Design—Built to comply with most rigid Health Dept. Standards.
- A.S.M.E. Code: Constructed in Accordance with The A.S.M.E. Code for 40 lbs. P.S.I. working pressure.
- Operation: Will operate efficiently at any steam pressure between 5 and 40 lbs. Utilizing steam from your steam plant.
- Conveniently located Steam Valve.
- Pouring Lip: Accurate Control.
- Handle: Positive in Action. Holds kettle *definitely* in upright, intermediate or completely tilted position.

FAST AND EFFICIENT

Excellent for cooking small amounts of puddings, sauces, soups, vegetables, and syrups. Ideal for many uses without the danger of scorching or burning.

Vulcan Hart Tilting Kettles can be used in battery where many varieties of foods can be prepared at one time.

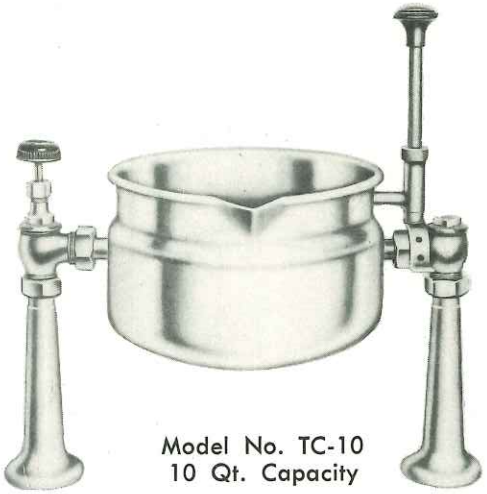

Model No. TC-10
10 Qt. Capacity

TILTING KETTLE DIMENSIONS

Model No.	Quarts Capacity	Overall Width	Height to top of Kettle	Height to top of Handle	Overall Depth	Size Steam Inlet Connection	Shipping Weight
TC-10	10	23¼"	14⅝"	22¼"	13½"	⅜"	35 Lbs.
TC-20	20	23¼"	18⅝"	22¼"	13½"	⅜"	40 Lbs.

VULCAN-HART MANUFACTURING COMPANY, INCORPORATED
2006 N. WESTERN PARKWAY LOUISVILLE 1, KENTUCKY

TILTING KETTLE DIMENSIONS

Model No.	Quarts Capacity	Overall Width	Height to top of Kettle	Height to top of Handle	Overall Depth	Size Steam Inlet Connection	Shipping Weight
TC-10	10	23¼"	14⅝"	22¼"	13½"	⅜"	35 Lbs.
TC-20	20	23¼"	18⅝"	22¼"	13½"	⅜"	40 Lbs.

VULCAN-HART MFG. CO.
LOUISVILLE, KENTUCKY

10 & 20 QUART CAPACITY TILTING TYPE KETTLES
40 P.S.I. WORKING PRESSURE, A.S.M.E. CODE VESSELS

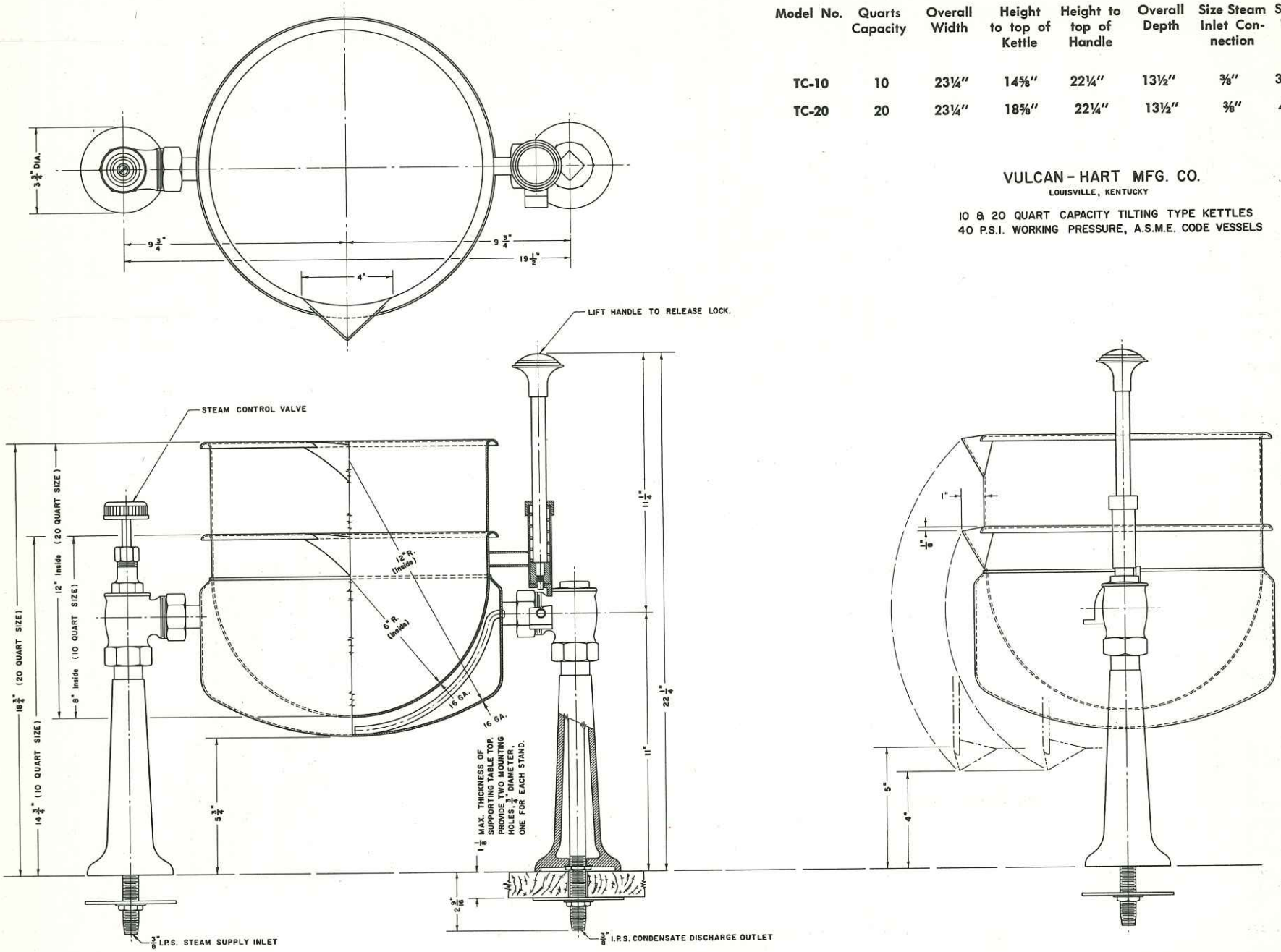

H-1533

VULCAN-HART

Stainless Steel Steam Jacketed Kettle

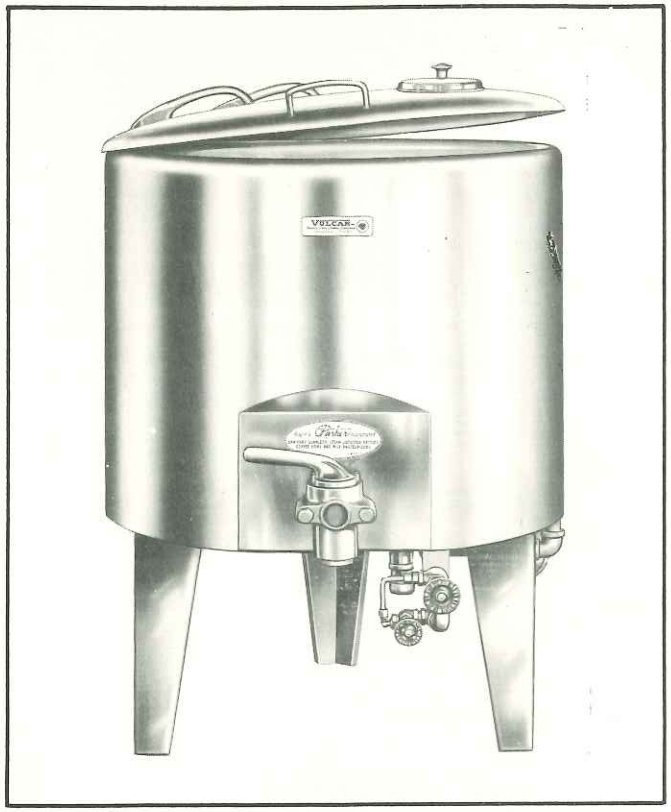

Model KL 30 on Legs

Model KL 40 (PB)
On Pedestal Base

GENERAL SPECIFICATIONS

1. MATERIAL AND WORKMANSHIP

(a.) All workmanship shall be first class in every respect. The kettles shall be free from all flaws that may affect the appearance or serviceability.

(b.) Kettles shall be constructed of Type 304 corrosion resisting steel. Corrosion resisting steel shall be the minimum thickness called for in preceding schedule with a plus or minus tolerance of 10% in the finished thickness.

(c.) All exposed surfaces on the outside of kettles shall have a smooth and even finish. The inside of kettles shall have a smooth finish that will not cause food to adhere.

2. DETAILED REQUIREMENTS

(a.) JACKET — The jacket shall be welded to a 1½" outside diameter stainless steel tubing which in turn is welded to the interior kettle and is ground and polished to form a smooth clean top working edge for the kettle.

(b.) STEAM INLET AND OUTLET — Steam inlet and outlet shall be fitted to the bottom of the kettle, as shown in attached drawings. The steam inlet connection shall be connected by corrosion-resisting tube to the top working edge tube described above, which shall be perforated around the entire top to give complete and even distribution of the steam.

(c.) DRAW-OFF ASSEMBLY — The draw-off assembly shall be 100% sanitary two-piece nickel alloy dairy type plug. The draw-off shall be attached to interior jacket so that the drain opening is visible to the eye. A safety lock shall be provided to prevent removal of plug except in open position. The bottom of the kettle shall be sloped to the draw-off opening, opening to be not more than 1" from the draw-off valve.

(d.) SAFETY VALVE — Each kettle shall be provided with a suitable brass valve of good commercial design, which shall be set at ten pounds pressure. Because of exclusive PARKER construction, PARKER Kettles operate on a fifteen pound maximum psi steam line, using ten pound relief valve.

(e.) LEGS — Legs shall be of 14 gauge stainless steel, one-piece construction, of sturdy design and welded to kettle assembly.

(f.) COVER — The cover shall be of 14 gauge one-piece stainless steel seamless construction, hinged at a 45 degree angle, with a raised handle, so that in opening, operator's arm shall not pass over kettle opening: shall be furnished with an observation port opening with a one-piece stainless steel cover with handle.

(g.) HANDLES — See above description.

(h.) STEAM JACKETED PRESSURE — The steam jacketed kettle shall be designed for a maximum operating pressure in the jacket of ten pounds per square inch. The complete kettle shall be capable of withstanding, without weeps or leakage, a cold water pressure of twenty pounds per square inch for not less than sixty minutes.

(i.) WELDING — All welded joints shall be made with suitable welding rods and fluxes. The welding flux shall be completely removed after the welding operation. The welded joints shall be smooth and shall present a uniform finish.

(j.) FINISH — All stainless steel parts of the kettle shall be a No. 4 finish.

(k.) ACCESSORIES — Kettle shall be shipped from the factory fully equipped with all accessories, ready for installation, including a 100% sanitary draw-off valve, steam line control valve, simmering valve, vacuum breaking check valve, thermostatic steam trap and approved ten pound safety relief valve, all assembled to kettle.

VULCAN·HART MANUFACTURING CO. 2006 NORTH WESTERN PARKWAY LOUISVILLE 3, KY.

SPECIFICATIONS: Kettle, For Steam Heat, Fully Jacketed, Vulcan-Hart (Parker)

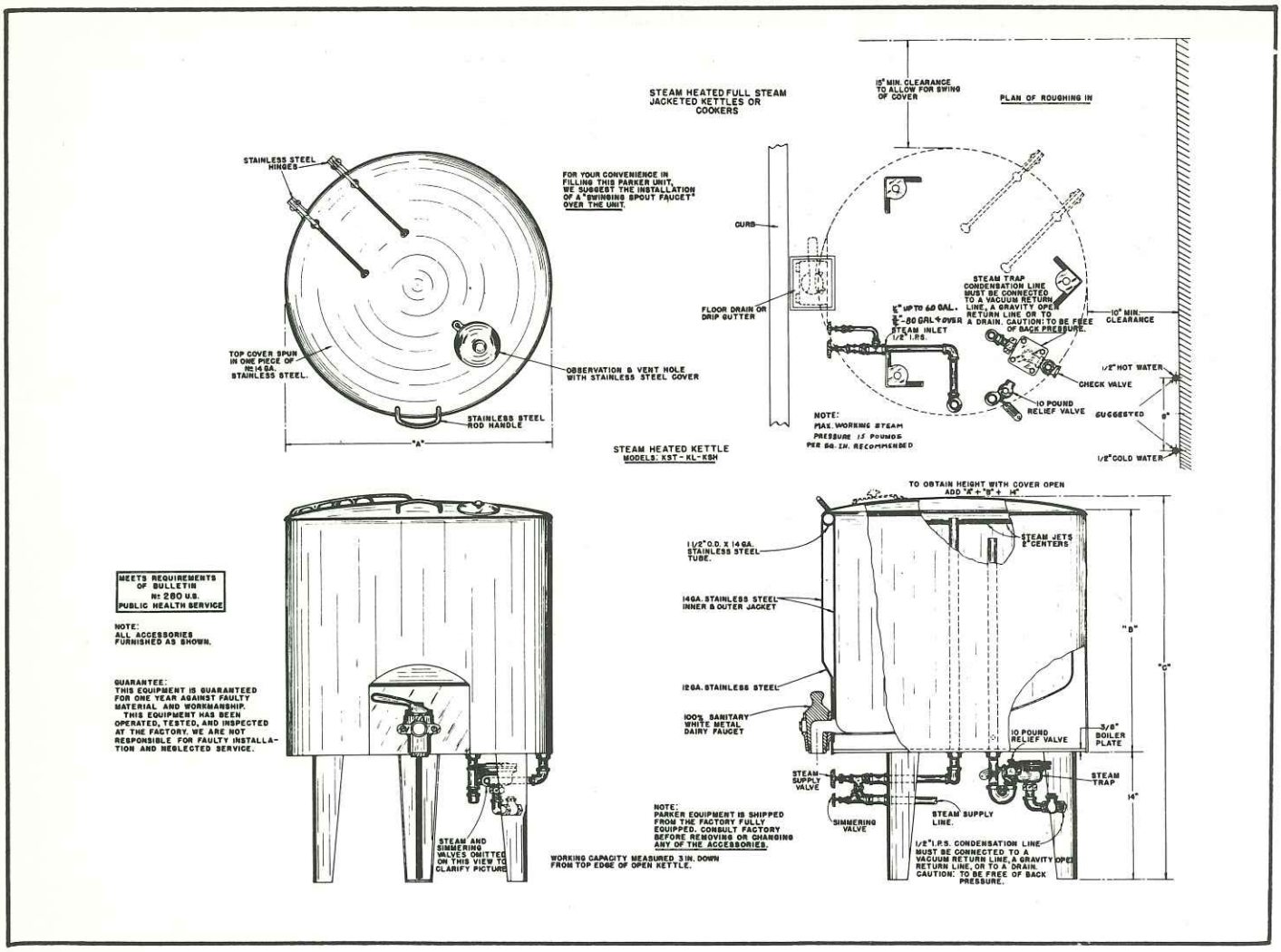

DETAILED SPECIFICATIONS

Model No.	Working Capacity In Gallons*	Full Capacity In Gallons	Draw Off Valve	Dimensions In Inches: Overall Height	Outside Diameter	Inside Diameter	Clearance Under Draw Off	Crated Weight Lbs.
STANDARD TYPE								
KST—40	35	40	1½"	46¾"	25"	22"	14"	280
KST—60	50	56	1½"	46¾"	29"	26"	14"	335
KST—80	65	74	1½"	46¾"	33"	30"	14"	410
KST—100	82	94	2"	48¾"	36½"	33½"	14"	495
KST—120	105	117	2"	54¾"	36½"	33½"	14"	525
KST—140	128	140	2"	60¾"	36½"	33½"	14"	550
LOW TYPE								
KL—20	17	20	1½"	40¾"	20½"	18"	14"	190
KL—30	25	30	1½"	40¾"	25"	22"	14"	240
KL—40	36	42	1½"	40¾"	29"	26"	14"	310
KL—60	46	55	1½"	40¾"	33"	30"	14"	370
KL—80	60	70	2"	42¾"	36½"	33½"	14"	430
SHALLOW TYPE								
KSH—13	10	13	1½"	34¾"	20½"	18"	14"	175
KSH—20	15	20	1½"	34¾"	25"	22"	14"	230
KSH—30	22	29	1½"	34¾"	29"	26"	14"	310
KSH—40	29	37	1½"	34¾"	33"	30"	14"	400
KSH—60	38	48	2"	36¾"	36½"	33½"	14"	420
MEAT ROASTER								
KSH—13M	10	13	2"	34¾"	20½"	18"	14"	185
KSH—20M	15	20	2"	34¾"	25"	22"	14"	240
KSH—30M	22	29	2"	34¾"	29"	26"	14"	320
KSH—40M	29	37	2"	34¾"	33"	30"	14"	410
KSH—60M	38	48	2"	36¾"	36½"	33½"	14"	430

*Working Capacity Measured 3" From Working Edge

(OVENS (GAS)

VULCAN

Specifications; Ovens, Sectional, Gas-Fired

This specification is for Oven No.

In Silvertone or Vulcadur	☐ **6014A**	☐ **6016A**
In Stainless Steel	☐ **16014A**	☐ **16016A**

The oven checked above shall consist of . . . one section, two 7" high bake compartments.

Complete dimensional specifications on reverse side of this sheet.

GENERAL: The exterior parts of the body shall be not less than 18 ga. carbon steel or 20 ga. stainless steel mounted on continuous rigid angle frame of ⅛ x ⅞ x 1⅜ angle or 14 ga. ⅞ x 1⅜ stainless angle. Body shall be of bolted construction with front vertical corners reinforced by 14 ga. die formed sections.

Walls and tops of oven interior shall be constructed of not less than 20 ga. carbon steel with formed and welded reinforcing members. Hearth or deck shall be not less than 11 ga. carbon steel flanged up on sides and back and reinforced to prevent buckling.

DOORS: Doors shall be of all welded steel construction; shall have concealed hinges without cast moving parts; shall be counter-balanced without the use of springs and shall remain closed or horizontally opened until moved. Hinge pin bearing shall be of graphited bronze. Baking compartment doors shall be capable of supporting without permanent deformation a load of 125 pounds per square foot of door surface when opened.

FINISH: Standard finish shall be Baked Black Vulcadur. Interior linings shall have corrosion-resistant finish. Stainless steel units shall have external parts made of No. 4 polished stainless, and interior parts shall be No. 2B stainless steel. Door handles shall be of tubular construction, chrome plated, not less than ¾" dia. and of proper length. Available in Vulcan Silvertone.

INSULATION: Sides, back and top shall be insulated with not less than 3" and doors with not less than 2" vitreous fiber insulation that shall be vermin and moisture proof and chemically, physically, and mechanically stable up to 1,000 degrees F. and shall not at any time contain voids; shall be packed at a homogenous density of not less than 2.5 pounds per cubic foot; shall have a thermal conductivity at a mean temperature of 75 degrees F. not exceeding 0.25 BTU per hour, per square foot, per inch, per degree F. and a heat capacity of not more than .075 BTU per degree F. per board foot. Ovens shall be unconditionally guaranteed against all insulation hazards.

BURNERS: There shall be two cast iron, one-piece burners with trailer arm for positive ignition. Each burner shall be individually controlled with heavy duty brass valve. Snap on, die cast valve handles shall be highly polished and supplied with set screw.

HEAT CONTROL: Each section shall be individually controlled by Robertshaw thermostat, heavy duty type equipped with steel capillary.

HEAT CIRCULATION: Oven shall be constructed with Multiple Heat Conduits designed to control and direct heat flow evenly to entire oven. Ovens shall be equipped with internal flue, scientifically baffled for tiering double or triple sections. Single draft divertor shall be of sufficient capacity for single, double or triple sections. Six inch flue collar shall be provided for installations where direct flue connection is desired.

BURNER CHAMBER: Burner chamber shall be equipped with hinged manifold door which shall provide access to burners, controls and valves without use of tools.

GAS CONNECTIONS: Each individual section is equipped with ¾" pipe inlet connection. When double or triple sections of ovens are required, rear manifold shall be provided for connection with 1¼" main gas supply.

LEGS: All legs are equipped with adjustable feet, for leveling ovens, and are supplied in the height as shown with detailed specifications on reverse side of this page.

GENERAL: All ovens shall be approved by American Gas Association in single or multiple sections.

Ovens may be mounted on solid type base of fire proof construction in place of legs, if desired.

Vulcan Sterling models shall have interior and exterior sheet steel parts of heavy gauge stainless, except the hearth which shall be of not less thon 11 ga. carbon steel. All interior and exterior parts shall be easily removed, without special tools, for cleaning or replacement.

AUTOMATIC OVEN LIGHTING: American Gas Association approved 100% safety pilot and automatic lighting shall be standard equipment on all ovens which bear the AGA seal of approval.

Provisions are made for steam injection and nozzles are furnished

BAKING AND ROASTING OVENS

SPECIFICATIONS

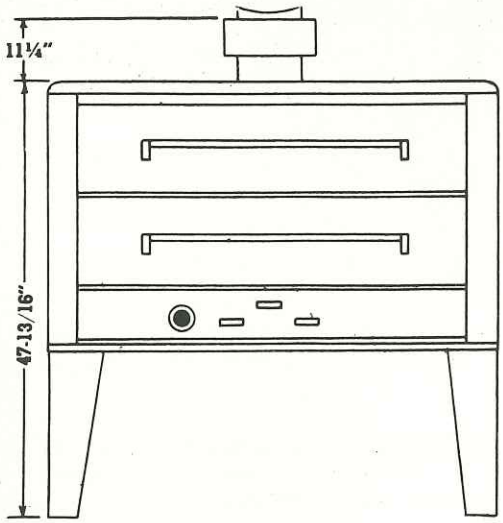

FRONT VIEW

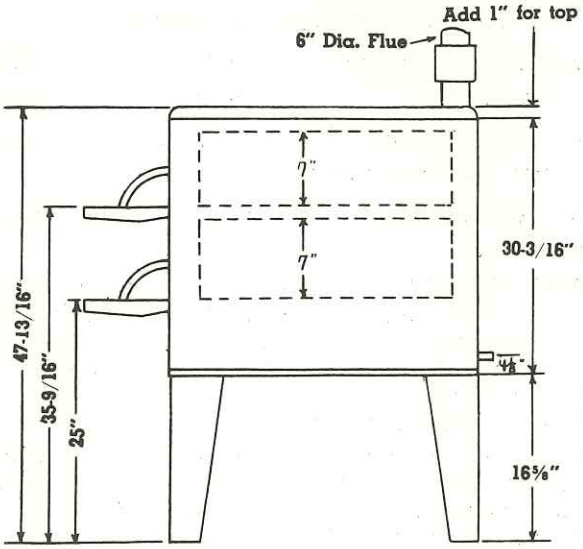

SIDE VIEW

*3" Minimum Space Between Adjacent units required for Secondary Air.

SPECIFICATIONS

Silvertone Finish or Vulcadur	No. 6016 ☐	No. 6014 ☐
Stainless Steel	No. 16016 ☐	No. 16014 ☐
No. of Sections	1	1
No. of Thermostatic Controls	1	1
No. of Compartments	2	2
Size of Compartments	42"x32"x7"	33"x22"x7"
Clearance below oven	16⅝"	16⅝"
Floor Space *	55½"x40"	46½"x30"
B. T. U. Input	50,000	27,000
Weight (crated) Total	775 lbs.	590 lbs.

PAN CAPACITIES

18"x26" Bun Pans	4	2
No. 200 Steam Table Pans	8	4
10" Pie Pans	24	12
19x4 Pullmans	28	16
9½"x5 1-lb. Loaves	48	24
13x10 ½ Cup Tins	18	8
No. 3 Bean Pots	40	16
5" Round Casseroles	96	48
20"x28" Roast Pans	4	2

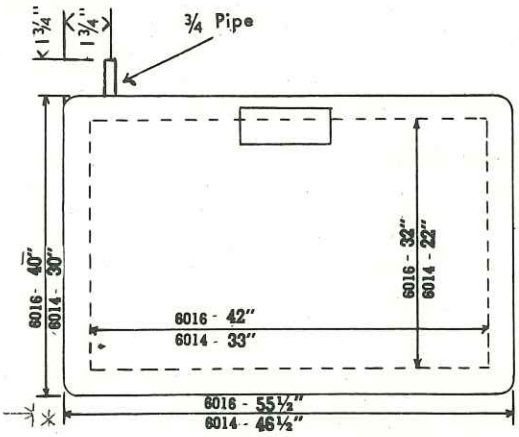

TOP VIEW

VULCAN • HART MANUFACTURING CO.

Factories and General Offices: BALTIMORE 22, MD. - LOUISVILLE 3, KENTUCKY

Sales Offices and Showrooms: NEW YORK • CHICAGO • LOS ANGELES
SAN FRANCISCO • BOSTON

In Canada: MOFFATS LTD., Weston, Ontario

HEAVY DUTY RANGES • BROILERS • BAKING OVENS
ROASTING OVENS • RESTAURANT RANGES • GRIDDLES
DEEP FAT FRYERS • FOOD WARMERS • ROLL WARMERS

VULCAN

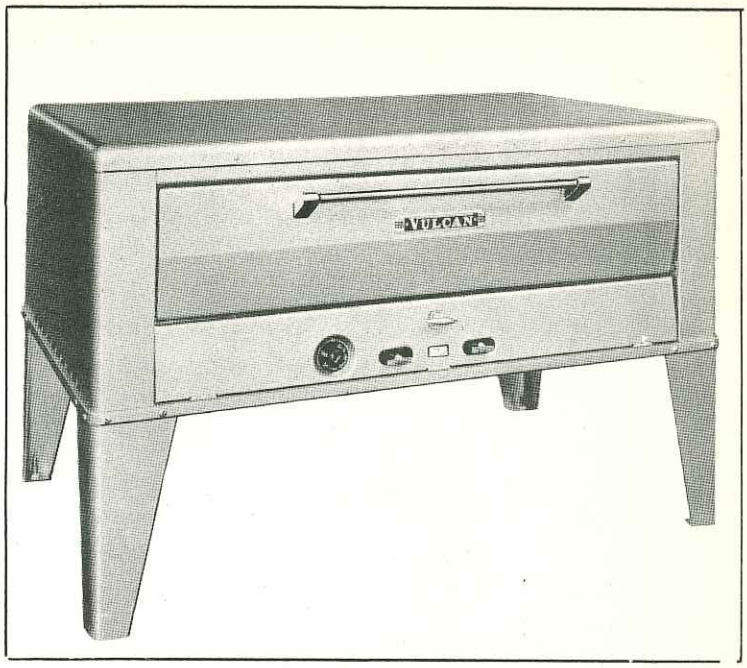

Specifications; Ovens, Sectional, Gas-Fired

This specification is for Oven No.

In Silvertone or Vulcadur	☐ **6015A**	☐ **6018A**
In Stainless Steel	☐ **16015A**	☐ **16018A**

The oven checked above shall consist of . . . one section, single 7" high bake compartment.

Complete dimensional specifications on reverse side of this sheet.

GENERAL: The exterior parts of the body shall be not less than 18 ga. carbon steel or 20 ga. stainless steel mounted on continuous rigid angle frame of ⅛ x ⅞ x 1⅜ angle or 14 ga. ⅞ x 1⅜ stainless angle. Body shall be of bolted construction with front vertical corners reinforced by 14 ga. die formed sections.

Walls and tops of oven interior shall be constructed of not less than 20 ga. carbon steel with formed and welded reinforcing members. Hearth or deck shall be not less than 11 ga. carbon steel flanged up on sides and back and reinforced to prevent buckling.

DOORS: Doors shall be of all welded steel construction; shall have concealed hinges without cast moving parts; shall be counter-balanced without the use of springs and shall remain closed or horizontally opened until moved. Hinge pin bearing shall be of graphited bronze. Baking compartment doors shall be capable of supporting without permanent deformation a load of 125 pounds per square foot of door surface when opened.

FINISH: Standard finish shall be Baked Black Vulcadur. Interior linings shall have corrosion-resistant finish. Stainless steel units shall have external parts made of No. 4 polished stainless, and interior parts shall be No. 2B stainless steel. Door handles shall be of tubular construction, chrome plated, not less than ¾" dia. and of proper length. Available in Vulcan Silvertone.

INSULATION: Sides, back and top shall be insulated with not less than 3" and doors with not less than 2" vitreous fiber insulation that shall be vermin and moisture proof and chemically, physically, and mechanically stable up to 1,000 degrees F. and shall not at any time contain voids; shall be packed at a homogenous density of not less than 2.5 pounds per cubic foot; shall have a thermal conductivity at a mean temperature of 75 degrees F. not exceeding 0.25 BTU per hour, per square foot, per inch, per degree F. and a heat capacity of not more than .075 BTU per degree F. per board foot. Ovens shall be unconditionally guaranteed against all insulation hazards.

BURNERS: There shall be two cast iron, one-piece burners with trailer arm for positive ignition. Each burner shall be individually controlled with heavy duty brass valve. Snap on, die cast valve handles shall be highly polished and supplied with set screw.

HEAT CONTROL: Each section shall be individually controlled by Robertshaw thermostat, heavy duty type equipped with steel capillary.

HEAT CIRCULATION: Oven shall be constructed with Multiple Heat Conduits designed to control and direct heat flow evenly to entire oven. Ovens shall be equipped with internal flue, scientifically baffled for tiering double or triple sections. Single draft divertor shall be of sufficient capacity for single, double or triple sections. Six inch flue collar shall be provided for installations where direct flue connection is desired.

BURNER CHAMBER: Burner chamber shall be equipped with hinged manifold door which shall provide access to burners, controls and valves without use of tools.

GAS CONNECTIONS: Each individual section is equipped with ¾" pipe inlet connection. When double or triple sections of ovens are required, rear manifold shall be provided for connection with 1¼" main gas supply.

LEGS: All legs are equipped with adjustable feet, for leveling ovens, and are supplied in the height as shown with detailed specifications on reverse side of this page.

GENERAL: All ovens shall be approved by American Gas Association in single or multiple sections.

Ovens may be mounted on solid type base of fire proof construction in place of legs, if desired.

Vulcan Sterling models shall have interior and exterior sheet steel parts of heavy gauge stainless, except the hearth which shall be of not less thon 11 ga. carbon steel. All interior and exterior parts shall be easily removed, without special tools, for cleaning or replacement.

AUTOMATIC OVEN LIGHTING: American Gas Association approved 100% safety pilot and automatic lighting shall be standard equipment on all ovens which bear the AGA seal of approval.

Provisions are made for steam injection and nozzles are furnished

BAKING AND ROASTING OVENS

SPECIFICATIONS

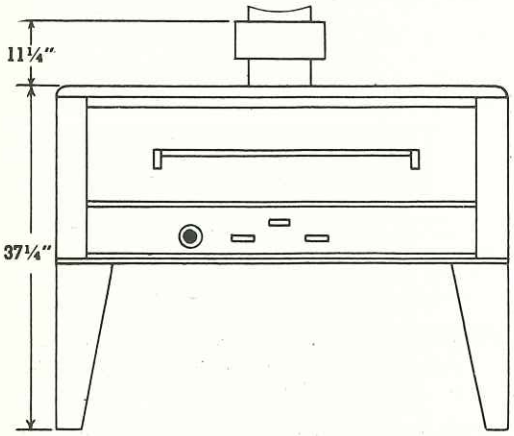

FRONT VIEW

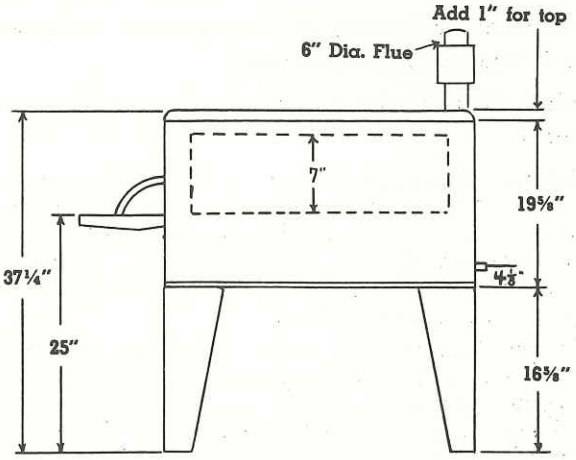

SIDE VIEW

*3" Minimum Space Between Adjacent units required for Secondary Air.

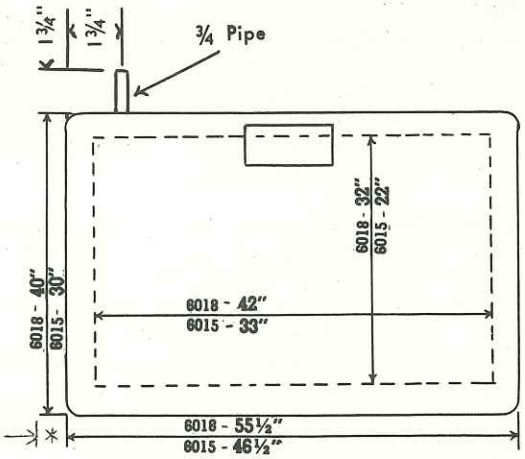

TOP VIEW

SPECIFICATIONS

Silvertone Finish or Vulcadur	No. 6018 ☐	No. 6015 ☐
Stainless Steel	No. 16018 ☐	No. 16015 ☐
No. of Sections	1	1
No. of Thermostatic Controls	1	1
No. of Compartments	1	1
Size of Compartments	42"x32"x7"	33"x22"x7"
Clearance below oven	16⅝"	16⅝"
Floor Space *	55½"x40"	46½"x30"
B. T. U. Input	40,000	20,000
Weight (crated) Total	575 lbs.	465 lbs.

PAN CAPACITIES

18"x26" Bun Pans	2	1
No. 200 Steam Table Pans	4	2
10" Pie Pans	12	6
19x4 Pullmans	14	8
9½"x5 1-lb. Loaves	24	12
13x10 ½ Cup Tins	9	4
No. 3 Bean Pots	20	8
5" Round Casseroles	48	24
20"x28" Roast Pans	2	1

VULCAN • HART MANUFACTURING CO.

Factories and General Offices: BALTIMORE 22, MD. - LOUISVILLE 3, KENTUCKY

Sales Offices and Showrooms: NEW YORK • CHICAGO • LOS ANGELES
SAN FRANCISCO • BOSTON

In Canada: MOFFATS LTD., Weston, Ontario

HEAVY DUTY RANGES • BROILERS • BAKING OVENS
ROASTING OVENS • RESTAURANT RANGES • GRIDDLES
DEEP FAT FRYERS • FOOD WARMERS • ROLL WARMERS

VULCAN

Specifications; Ovens, Sectional, Gas-Fired

This specification is for Oven No.

In Silvertone or Vulcadur	☐ **6017A**	☐ **6019A**
In Stainless Steel	☐ **16017A**	☐ **16019A**

The oven checked above shall consist of . . . one section, one 12" high roast compartment.

Complete dimensional specifications on reverse side of this sheet.

GENERAL: The exterior parts of the body shall be not less than 18 ga. carbon steel or 20 ga. stainless steel mounted on continuous rigid angle frame of ⅛ x ⅞ x 1⅜ angle or 14 ga. ⅞ x 1⅜ stainless angle. Body shall be of bolted construction with front vertical corners reinforced by 14 ga. die formed sections.

Walls and tops of oven interior shall be constructed of not less than 20 ga. carbon steel with formed and welded reinforcing members. Hearth or deck shall be not less than 11 ga. carbon steel flanged up on sides and back and reinforced to prevent buckling.

DOORS: Doors shall be of all welded steel construction; shall have concealed hinges without cast moving parts; shall be counter-balanced without the use of springs and shall remain closed or horizontally opened until moved. Hinge pin bearing shall be of graphited bronze. Baking compartment doors shall be capable of supporting without permanent deformation a load of 125 pounds per square foot of door surface when opened.

FINISH: Standard finish shall be Baked Black Vulcadur. Interior linings shall have corrosion-resistant finish. Stainless steel units shall have external parts made of No. 4 polished stainless, and interior parts shall be No. 2B stainless steel. Door handles shall be of tubular construction, chrome plated, not less than ¾" dia. and of proper length. Available in Vulcan Silvertone.

INSULATION: Sides, back and top shall be insulated with not less than 3" and doors with not less than 2" vitreous fiber insulation that shall be vermin and moisture proof and chemically, physically, and mechanically stable up to 1,000 degrees F. and shall not at any time contain voids; shall be packed at a homogenous density of not less than 2.5 pounds per cubic foot; shall have a thermal conductivity at a mean temperature of 75 degrees F. not exceeding 0.25 BTU per hour, per square foot, per inch, per degree F. and a heat capacity of not more than .075 BTU per degree F. per board foot. Ovens shall be unconditionally guaranteed against all insulation hazards.

BURNERS: There shall be two cast iron, one-piece burners with trailer arm for positive ignition. Each burner shall be individually controlled with heavy duty brass valve. Snap on, die cast valve handles shall be highly polished and supplied with set screw.

HEAT CONTROL: Each section shall be individually controlled by Robertshaw thermostat, heavy duty type equipped with steel capillary.

HEAT CIRCULATION: Oven shall be constructed with Multiple Heat Conduits designed to control and direct heat flow evenly to entire oven. Ovens shall be equipped with internal flue, scientifically baffled for tiering double or triple sections. Single draft divertor shall be of sufficient capacity for single, double or triple sections. Six inch flue collar shall be provided for installations where direct flue connection is desired.

BURNER CHAMBER: Burner chamber shall be equipped with hinged manifold door which shall provide access to burners, controls and valves without use of tools.

GAS CONNECTIONS: Each individual section is equipped with ¾" pipe inlet connection. When double or triple sections of ovens are required, rear manifold shall be provided for connection with 1¼" main gas supply.

LEGS: All legs are equipped with adjustable feet, for leveling ovens, and are supplied in the height as shown with detailed specifications on reverse side of this page.

GENERAL: All ovens shall be approved by American Gas Association in single or multiple sections.

Ovens may be mounted on solid type base of fire proof construction in place of legs, if desired.

Vulcan Sterling models shall have interior and exterior sheet steel parts of heavy gauge stainless, except the hearth which shall be of not less thon 11 ga. carbon steel. All interior and exterior parts shall be easily removed, without special tools, for cleaning or replacement.

AUTOMATIC OVEN LIGHTING: American Gas Association approved 100% safety pilot and automatic lighting shall be standard equipment on all ovens which bear the AGA seal of approval.

Provisions are made for steam injection and nozzles are furnished

Center removable shelf with adjustable vents in side linings can be furnished on 12" roasting sections at moderate additional cost.

LITHO IN U.S.A.

VULCAN

BAKING AND ROASTING OVENS

SPECIFICATIONS

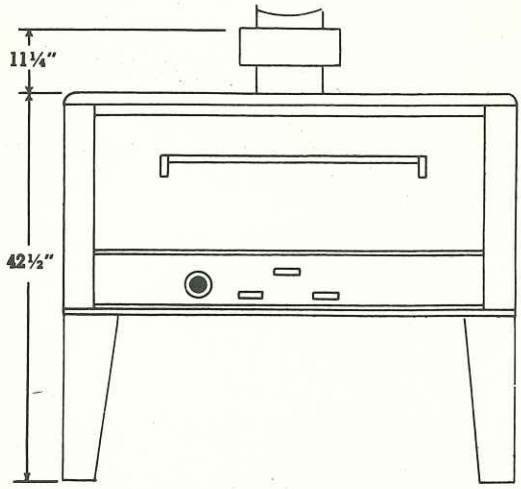

FRONT VIEW

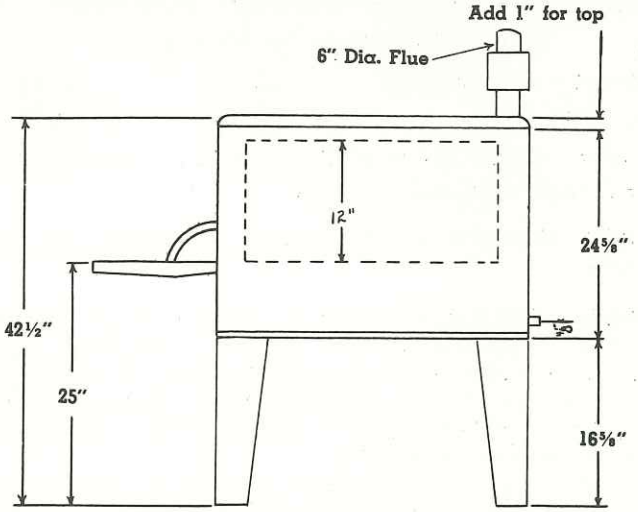

SIDE VIEW

*3" Minimum Space Between Adjacent units required for Secondary Air.

SPECIFICATIONS

Silvertone Finish or Vulcadur	No. 6019 ☐	No. 6017 ☐
Stainless Steel	No. 16019 ☐	No. 16017 ☐
No. of Sections	1	1
No. of Thermostatic Controls	1	1
No. of Compartments	1	1
Size of Compartments	42"x32"x12"	33"x22"x12"
Clearance below oven	16⅝"	16⅝"
Floor Space *	55½"x40"	46½"x30"
B. T. U. Input	50,000	27,000
Weight (crated) Total	630 lbs.	475 lbs.

PAN CAPACITIES

18"x26" Bun Pans*	2	1
No. 200 Steam Table Pans*	4	2
10" Pie Pans*	12	6
19x4 Pullmans*	14	8
9½"x5 1-lb. Loaves	24	12
13x10 ½ Cup Tins*	9	4
No. 3 Bean Pots	20	8
5" Round Casseroles	48	24
20"x28" Roast Pans	2	1
25 lb. Turkeys	8	3-4

*Compartment capacity of 12" high roast section may be doubled for items marked when extra removable shelf is used.

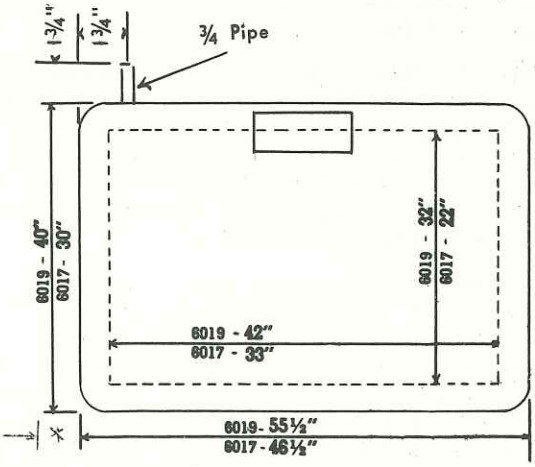

TOP VIEW

VULCAN • HART MANUFACTURING CO.

Factories and General Offices: BALTIMORE 22, MD. - LOUISVILLE 3, KENTUCKY

Sales Offices and Showrooms: NEW YORK • CHICAGO • LOS ANGELES SAN FRANCISCO • BOSTON

In Canada: MOFFATS LTD., Weston, Ontario

HEAVY DUTY RANGES • BROILERS • BAKING OVENS
ROASTING OVENS • RESTAURANT RANGES • GRIDDLES
DEEP FAT FRYERS • FOOD WARMERS • ROLL WARMERS

VULCAN

Specifications; Ovens, Sectional, Gas-Fired

This specification is for Oven No.

In Silvertone or Vulcadur	☐ **6055A**	☐ **6088A**
In Stainless Steel	☐ **16055A**	☐ **16088A**

The oven checked above shall consist of . . . two separate 7" single bake compartments.

Complete dimensional specifications on reverse side of this sheet.

GENERAL: The exterior parts of the body shall be not less than 18 ga. carbon steel or 20 ga. stainless steel mounted on continuous rigid angle frame of ⅛ x ⅞ x 1⅜ angle or 14 ga. ⅞ x 1⅜ stainless angle. Body shall be of bolted construction with front vertical corners reinforced by 14 ga. die formed sections.

Walls and tops of oven interior shall be constructed of not less than 20 ga. carbon steel with formed and welded reinforcing members. Hearth or deck shall be not less than 11 ga. carbon steel flanged up on sides and back and reinforced to prevent buckling.

DOORS: Doors shall be of all welded steel construction; shall have concealed hinges without cast moving parts; shall be counter-balanced without the use of springs and shall remain closed or horizontally opened until moved. Hinge pin bearing shall be of graphited bronze. Baking compartment doors shall be capable of supporting without permanent deformation a load of 125 pounds per square foot of door surface when opened.

FINISH: Standard finish shall be Baked Black Vulcadur. Interior linings shall have corrosion-resistant finish. Stainless steel units shall have external parts made of No. 4 polished stainless, and interior parts shall be No. 2B stainless steel. Door handles shall be of tubular construction, chrome plated, not less than ¾" dia. and of proper length. Available in Vulcan Silvertone.

INSULATION: Sides, back and top shall be insulated with not less than 3" and doors with not less than 2" vitreous fiber insulation that shall be vermin and moisture proof and chemically, physically, and mechanically stable up to 1,000 degrees F. and shall not at any time contain voids; shall be packed at a homogenous density of not less than 2.5 pounds per cubic foot; shall have a thermal conductivity at a mean temperature of 75 degrees F. not exceeding 0.25 BTU per hour, per square foot, per inch, per degree F. and a heat capacity of not more than .075 BTU per degree F. per board foot. Ovens shall be unconditionally guaranteed against all insulation hazards.

BURNERS: There shall be two cast iron, one-piece burners with trailer arm for positive ignition. Each burner shall be individually controlled with heavy duty brass valve. Snap on, die cast valve handles shall be highly polished and supplied with set screw.

HEAT CONTROL: Each section shall be individually controlled by Robertshaw thermostat, heavy duty type equipped with steel capillary.

HEAT CIRCULATION: Oven shall be constructed with Multiple Heat Conduits designed to control and direct heat flow evenly to entire oven. Ovens shall be equipped with internal flue, scientifically baffled for tiering double or triple sections. Single draft divertor shall be of sufficient capacity for single, double or triple sections. Six inch flue collar shall be provided for installations where direct flue connection is desired.

BURNER CHAMBER: Burner chamber shall be equipped with hinged manifold door which shall provide access to burners, controls and valves without use of tools.

GAS CONNECTIONS: Each individual section is equipped with ¾" pipe inlet connection. When double or triple sections of ovens are required, rear manifold shall be provided for connection with 1¼" main gas supply.

LEGS: All legs are equipped with adjustable feet, for leveling ovens, and are supplied in the height as shown with detailed specifications on reverse side of this page.

GENERAL: All ovens shall be approved by American Gas Association in single or multiple sections.

Ovens may be mounted on solid type base of fire proof construction in place of legs, if desired.

Vulcan Sterling models shall have interior and exterior sheet steel parts of heavy gauge stainless, except the hearth which shall be of not less thon 11 ga. carbon steel. All interior and exterior parts shall be easily removed, without special tools, for cleaning or replacement.

AUTOMATIC OVEN LIGHTING: American Gas Association approved 100% safety pilot and automatic lighting shall be standard equipment on all ovens which bear the AGA seal of approval.

Provisions are made for steam injection and nozzles are furnished

LITHO IN U.S.A.

VULCAN

BAKING AND ROASTING OVENS

SPECIFICATIONS

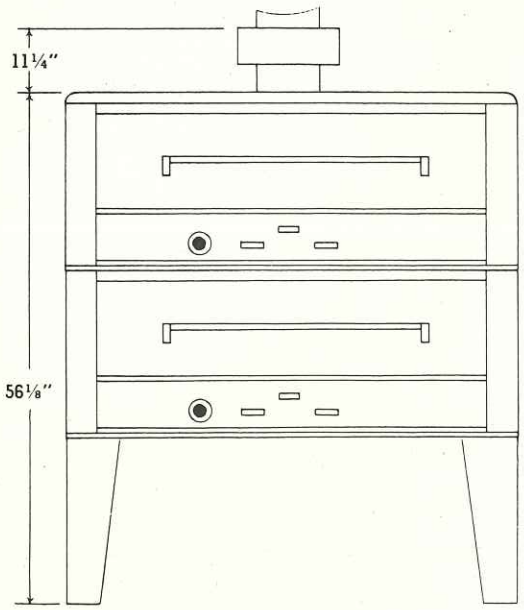

FRONT VIEW

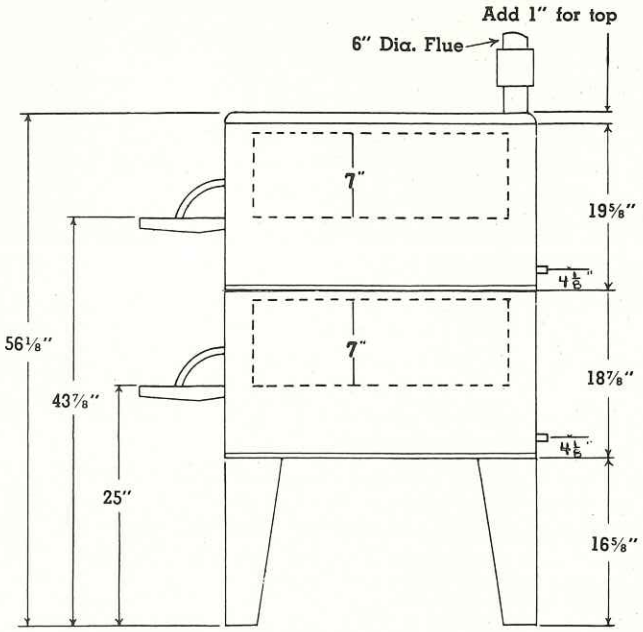

SIDE VIEW

*3" Minimum Space Between Adjacent units required for Secondary Air.

SPECIFICATIONS

Silvertone Finish or Vulcadur	No. 6088 ☐	No. 6055 ☐
Stainless Steel	No. 16088 ☐	No. 16055 ☐
No. of Sections	2	2
No. of Thermostatic Controls	2	2
No. of Compartments	2	2
Size of Compartments	42"x32"x7"	33"x22"x7"
Clearance below oven	16⅝"	16⅝"
Floor Space *	55½"x40"	46½"x30"
B. T. U. Input	80,000	40,000
Weight (crated) Total	1150 lbs.	930 lbs.
Weight Ea. Sect.	(2) 575 lbs.	(2) 465 lbs.

PAN CAPACITIES

18"x26" Bun Pans	4	2
No. 200 Steam Table Pans	8	4
10" Pie Pans	24	12
19x4 Pullmans	28	16
9½"x5 1-lb. Loaves	48	24
13x10 ½ Cup Tins	18	8
No. 3 Bean Pots	40	16
5" Round Casseroles	96	48
20"x28" Roast Pans	4	2

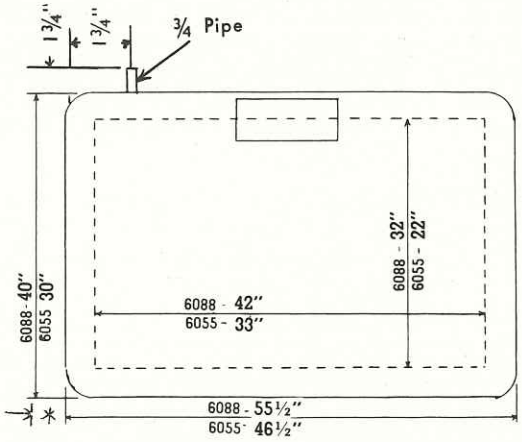

TOP VIEW

VULCAN • HART MANUFACTURING CO.

Factories and General Offices: BALTIMORE 22, MD. - LOUISVILLE 3, KENTUCKY

Sales Offices and Showrooms: NEW YORK • CHICAGO • LOS ANGELES
SAN FRANCISCO • BOSTON

In Canada: MOFFATS LTD., Weston, Ontario

HEAVY DUTY RANGES • BROILERS • BAKING OVENS
ROASTING OVENS • RESTAURANT RANGES • GRIDDLES
DEEP FAT FRYERS • FOOD WARMERS • ROLL WARMERS

VULCAN

Specifications; Ovens, Sectional, Gas-Fired

This specification is for Oven No.

In Silvertone or Vulcadur	☐ **6555A**	☐ **6888A**
In Stainless Steel	☐ **16555A**	☐ **16888A**

The oven checked above shall consist of . . . three separate 7" high single bake compartments.

Complete dimensional specifications on reverse side of this sheet.

GENERAL: The exterior parts of the body shall be not less than 18 ga. carbon steel or 20 ga. stainless steel mounted on continuous rigid angle frame of ⅛ x ⅞ x 1⅜ angle or 14 ga. ⅞ x 1⅜ stainless angle. Body shall be of bolted construction with front vertical corners reinforced by 14 ga. die formed sections.

Walls and tops of oven interior shall be constructed of not less than 20 ga. carbon steel with formed and welded reinforcing members. Hearth or deck shall be not less than 11 ga. carbon steel flanged up on sides and back and reinforced to prevent buckling.

DOORS: Doors shall be of all welded steel construction; shall have concealed hinges without cast moving parts; shall be counter-balanced without the use of springs and shall remain closed or horizontally opened until moved. Hinge pin bearing shall be of graphited bronze. Baking compartment doors shall be capable of supporting without permanent deformation a load of 125 pounds per square foot of door surface when opened.

FINISH: Standard finish shall be Baked Black Vulcadur. Interior linings shall have corrosion-resistant finish. Stainless steel units shall have external parts made of No. 4 polished stainless, and interior parts shall be No. 2B stainless steel. Door handles shall be of tubular construction, chrome plated, not less than ¾" dia. and of proper length. Available in Vulcan Silvertone.

INSULATION: Sides, back and top shall be insulated with not less than 3" and doors with not less than 2" vitreous fiber insulation that shall be vermin and moisture proof and chemically, physically, and mechanically stable up to 1,000 degrees F. and shall not at any time contain voids; shall be packed at a homogenous density of not less than 2.5 pounds per cubic foot; shall have a thermal conductivity at a mean temperature of 75 degrees F. not exceeding 0.25 BTU per hour, per square foot, per inch, per degree F. and a heat capacity of not more than .075 BTU per degree F. per board foot. Ovens shall be unconditionally guaranteed against all insulation hazards.

BURNERS: There shall be two cast iron, one-piece burners with trailer arm for positive ignition. Each burner shall be individually controlled with heavy duty brass valve. Snap on, die cast valve handles shall be highly polished and supplied with set screw.

HEAT CONTROL: Each section shall be individually controlled by Robertshaw thermostat, heavy duty type equipped with steel capillary.

HEAT CIRCULATION: Oven shall be constructed with Multiple Heat Conduits designed to control and direct heat flow evenly to entire oven. Ovens shall be equipped with internal flue, scientifically baffled for tiering double or triple sections. Single draft divertor shall be of sufficient capacity for single, double or triple sections. Six inch flue collar shall be provided for installations where direct flue connection is desired.

BURNER CHAMBER: Burner chamber shall be equipped with hinged manifold door which shall provide access to burners, controls and valves without use of tools.

GAS CONNECTIONS: Each individual section is equipped with ¾" pipe inlet connection. When double or triple sections of ovens are required, rear manifold shall be provided for connection with 1¼" main gas supply.

LEGS: All legs are equipped with adjustable feet, for leveling ovens, and are supplied in the height as shown with detailed specifications on reverse side of this page.

GENERAL: All ovens shall be approved by American Gas Association in single or multiple sections.

Ovens may be mounted on solid type base of fire proof construction in place of legs, if desired.

Vulcan Sterling models shall have interior and exterior sheet steel parts of heavy gauge stainless, except the hearth which shall be of not less thon 11 ga. carbon steel. All interior and exterior parts shall be easily removed, without special tools, for cleaning or replacement.

AUTOMATIC OVEN LIGHTING: American Gas Association approved 100% safety pilot and automatic lighting shall be standard equipment on all ovens which bear the AGA seal of approval.

Provisions are made for steam injection and nozzles are furnished

LITHO IN U.S.A.

VULCAN

BAKING AND ROASTING OVENS

SPECIFICATIONS

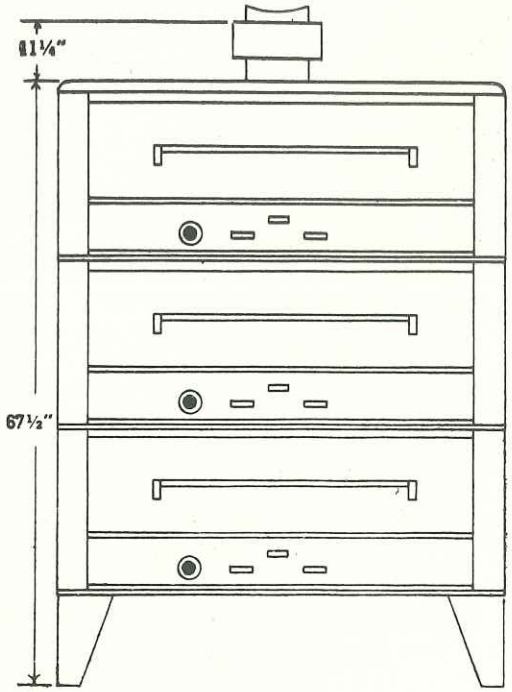

FRONT VIEW

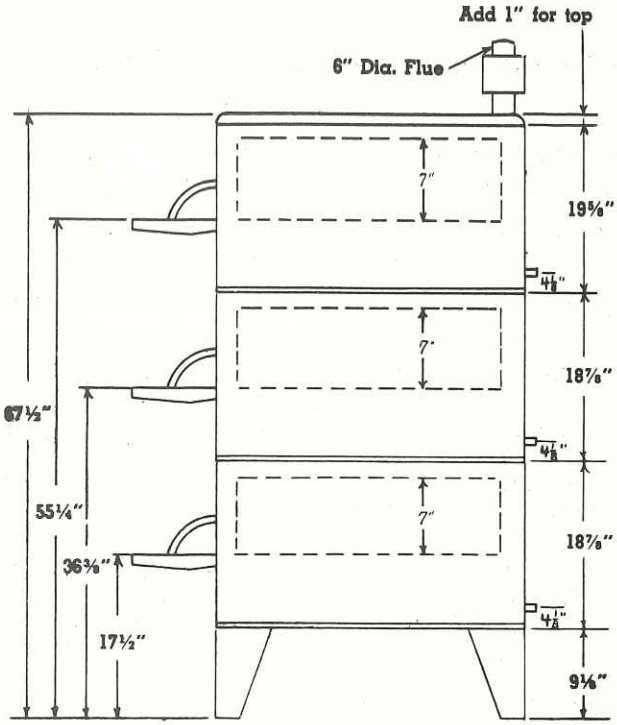

SIDE VIEW

*3" Minimum Space Between Adjacent units required for Secondary Air.

SPECIFICATIONS

Silvertone Finish or Vulcadur	No. 6888 ☐	No. 6555 ☐
Stainless Steel	No. 16888 ☐	No. 16555 ☐
No. of Sections	3	3
No. of Thermostatic Controls	3	3
No. of Compartments	3	3
Size of Compartments	42"x32"x7"	33"x22"x7"
Clearance below oven	9⅛"	9⅛"
Floor Space *	55½"x40"	46½"x30"
B. T. U. Input	120,000	60,000
Weight (crated) Total	1725 lbs.	1395 lbs.
Weight Ea. Sect.	(3) 575 lbs.	(3) 465 lbs.

PAN CAPACITIES

18"x26" Bun Pans	6	3
No. 200 Steam Table Pans	12	6
10" Pie Pans	36	18
19x4 Pullmans	42	24
9½"x5 1-lb. Loaves	72	36
13x10 ½ Cup Tins	27	12
No. 3 Bean Pots	60	24
5" Round Casseroles	144	72
20"x28" Roast Pans	6	3

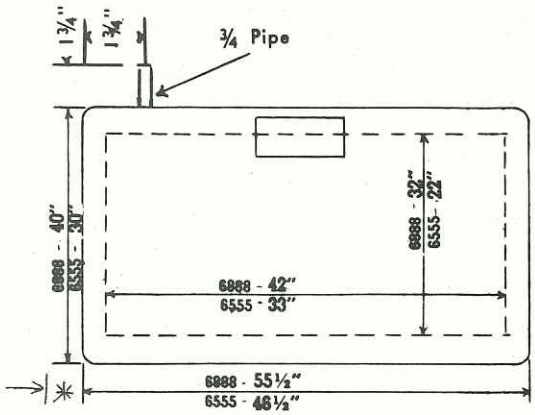

TOP VIEW

VULCAN • HART MANUFACTURING CO.

Factories and General Offices: BALTIMORE 22, MD. - LOUISVILLE 3, KENTUCKY

Sales Offices and Showrooms: NEW YORK • CHICAGO • LOS ANGELES SAN FRANCISCO • BOSTON

In Canada: MOFFATS LTD., Weston, Ontario

HEAVY DUTY RANGES • BROILERS • BAKING OVENS ROASTING OVENS • RESTAURANT RANGES • GRIDDLES DEEP FAT FRYERS • FOOD WARMERS • ROLL WARMERS

VULCAN

Specifications; Ovens, Sectional, Gas-Fired

This specification is for Oven No.

In Silvertone or Vulcadur	☐ **6044A**	☐ **6066A**
In Stainless Steel	☐ **16044A**	☐ **16066A**

The oven checked above shall consist of . . . two separate sections, four 7" high bake compartments

Complete dimensional specifications on reverse side of this sheet.

GENERAL: The exterior parts of the body shall be not less than 18 ga. carbon steel or 20 ga. stainless steel mounted on continuous rigid angle frame of ⅛ x ⅞ x 1⅜ angle or 14 ga. ⅞ x 1⅜ stainless angle. Body shall be of bolted construction with front vertical corners reinforced by 14 ga. die formed sections.

Walls and tops of oven interior shall be constructed of not less than 20 ga. carbon steel with formed and welded reinforcing members. Hearth or deck shall be not less than 11 ga. carbon steel flanged up on sides and back and reinforced to prevent buckling.

DOORS: Doors shall be of all welded steel construction; shall have concealed hinges without cast moving parts; shall be counter-balanced without the use of springs and shall remain closed or horizontally opened until moved. Hinge pin bearing shall be of graphited bronze. Baking compartment doors shall be capable of supporting without permanent deformation a load of 125 pounds per square foot of door surface when opened.

FINISH: Standard finish shall be Baked Black Vulcadur. Interior linings shall have corrosion-resistant finish. Stainless steel units shall have external parts made of No. 4 polished stainless, and interior parts shall be No. 2B stainless steel. Door handles shall be of tubular construction, chrome plated, not less than ¾" dia. and of proper length. Available in Vulcan Silvertone.

INSULATION: Sides, back and top shall be insulated with not less than 3" and doors with not less than 2" vitreous fiber insulation that shall be vermin and moisture proof and chemically, physically, and mechanically stable up to 1,000 degrees F. and shall not at any time contain voids; shall be packed at a homogenous density of not less than 2.5 pounds per cubic foot; shall have a thermal conductivity at a mean temperature of 75 degrees F. not exceeding 0.25 BTU per hour, per square foot, per inch, per degree F. and a heat capacity of not more than .075 BTU per degree F. per board foot. Ovens shall be unconditionally guaranteed against all insulation hazards.

BURNERS: There shall be two cast iron, one-piece burners with trailer arm for positive ignition. Each burner shall be individually controlled with heavy duty brass valve. Snap on, die cast valve handles shall be highly polished and supplied with set screw.

HEAT CONTROL: Each section shall be individually controlled by Robertshaw thermostat, heavy duty type equipped with steel capillary.

HEAT CIRCULATION: Oven shall be constructed with Multiple Heat Conduits designed to control and direct heat flow evenly to entire oven. Ovens shall be equipped with internal flue, scientifically baffled for tiering double or triple sections. Single draft divertor shall be of sufficient capacity for single, double or triple sections. Six inch flue collar shall be provided for installations where direct flue connection is desired.

BURNER CHAMBER: Burner chamber shall be equipped with hinged manifold door which shall provide access to burners, controls and valves without use of tools.

GAS CONNECTIONS: Each individual section is equipped with ¾" pipe inlet connection. When double or triple sections of ovens are required, rear manifold shall be provided for connection with 1¼" main gas supply.

LEGS: All legs are equipped with adjustable feet, for leveling ovens, and are supplied in the height as shown with detailed specifications on reverse side of this page.

GENERAL: All ovens shall be approved by American Gas Association in single or multiple sections.

Ovens may be mounted on solid type base of fire proof construction in place of legs, if desired.

Vulcan Sterling models shall have interior and exterior sheet steel parts of heavy gauge stainless, except the hearth which shall be of not less thon 11 ga. carbon steel. All interior and exterior parts shall be easily removed, without special tools, for cleaning or replacement.

AUTOMATIC OVEN LIGHTING: American Gas Association approved 100% safety pilot and automatic lighting shall be standard equipment on all ovens which bear the AGA seal of approval.

Provisions are made for steam injection and nozzles are furnished

VULCAN

BAKING AND ROASTING OVENS

SPECIFICATIONS

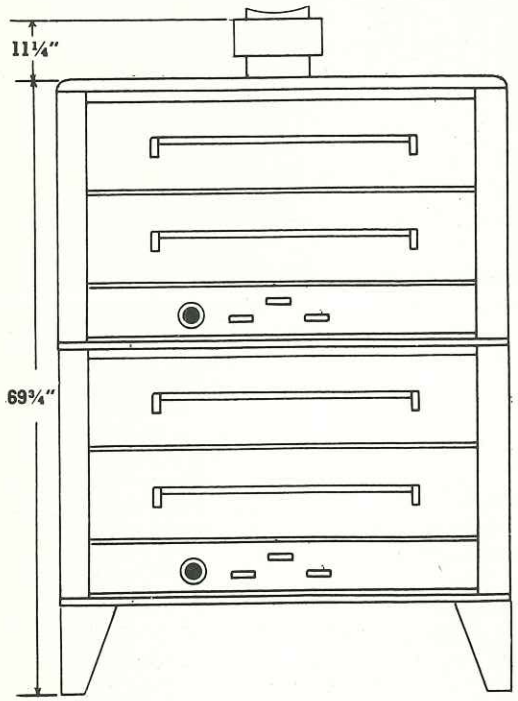

FRONT VIEW

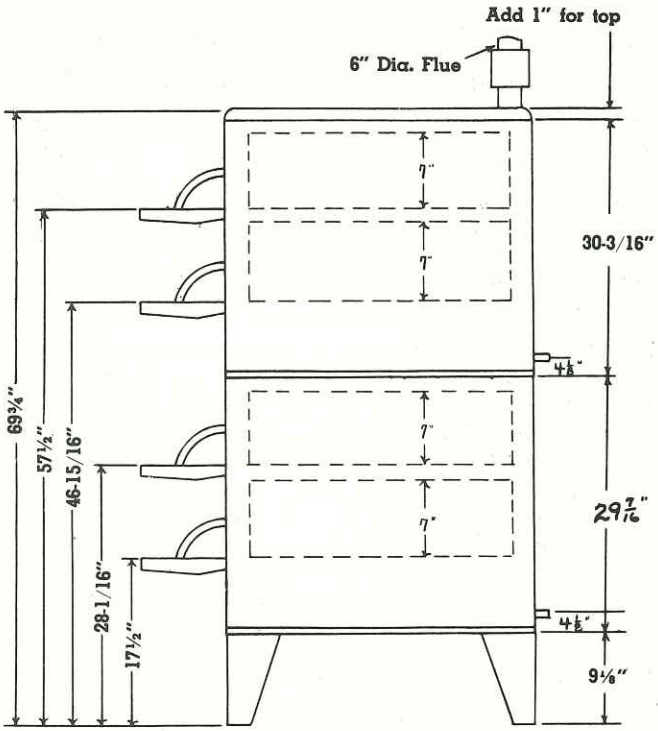

SIDE VIEW

*3" Minimum Space Between Adjacent units required for Secondary Air.

SPECIFICATIONS

Silvertone Finish or Vulcadur	No. 6066 ☐	No. 6044 ☐
Stainless Steel	No. 16066 ☐	No. 16044 ☐
No. of Sections	2	2
No. of Thermostatic Controls	2	2
No. of Compartments	4	4
Size of Compartments	42"x32"x7"	33"x22"x7"
Clearance below oven	9⅛"	9⅛"
Floor Space *	55½"x40"	46½"x30"
B. T. U. Input	100,000	54,000
Weight (crated) Total	1550 lbs.	1180 lbs.
Weight Ea. Sect.	(2) 775 lbs.	(2) 590 lbs.

PAN CAPACITIES

18"x26" Bun Pans	8	4
No. 200 Steam Table Pans	16	8
10" Pie Pans	48	24
19x4 Pullmans	56	32
9½"x5 1-lb. Loaves	96	48
13x10 ½ Cup Tins	36	16
No. 3 Bean Pots	80	32
5" Round Casseroles	192	96
20"x28" Roast Pans	8	4

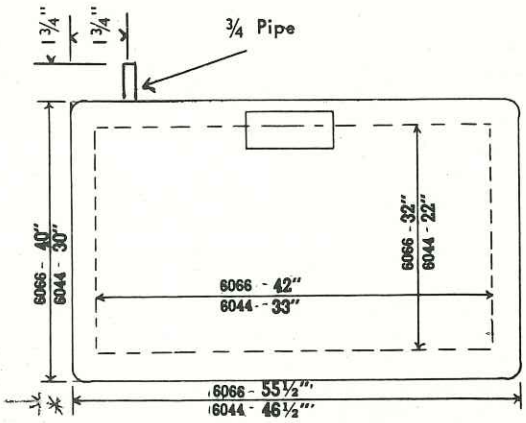

TOP VIEW

VULCAN • HART MANUFACTURING CO.

Factories and General Offices: BALTIMORE 22, MD. - LOUISVILLE 3, KENTUCKY

Sales Offices and Showrooms: NEW YORK • CHICAGO • LOS ANGELES
SAN FRANCISCO • BOSTON

In Canada: MOFFATS LTD., Weston, Ontario

HEAVY DUTY RANGES • BROILERS • BAKING OVENS
ROASTING OVENS • RESTAURANT RANGES • GRIDDLES
DEEP FAT FRYERS • FOOD WARMERS • ROLL WARMERS

VULCAN

Specifications; Ovens, Sectional, Gas-Fired

This specification is for Oven No.

In Silvertone or Vulcadur	☐ **6077A**	☐ **6099A**
In Stainless Steel	☐ **16077A**	☐ **16099A**

The oven checked above shall consist of . . . two separate sections, two 12" high roast compartments.

Complete dimensional specifications on reverse side of this sheet.

GENERAL: The exterior parts of the body shall be not less than 18 ga. carbon steel or 20 ga. stainless steel mounted on continuous rigid angle frame of ⅛ x ⅞ x 1⅜ angle or 14 ga. ⅞ x 1⅜ stainless angle. Body shall be of bolted construction with front vertical corners reinforced by 14 ga. die formed sections.

Walls and tops of oven interior shall be constructed of not less than 20 ga. carbon steel with formed and welded reinforcing members. Hearth or deck shall be not less than 11 ga. carbon steel flanged up on sides and back and reinforced to prevent buckling.

DOORS: Doors shall be of all welded steel construction; shall have concealed hinges without cast moving parts; shall be counter-balanced without the use of springs and shall remain closed or horizontally opened until moved. Hinge pin bearing shall be of graphited bronze. Baking compartment doors shall be capable of supporting without permanent deformation a load of 125 pounds per square foot of door surface when opened.

FINISH: Standard finish shall be Baked Black Vulcadur. Interior linings shall have corrosion-resistant finish. Stainless steel units shall have external parts made of No. 4 polished stainless, and interior parts shall be No. 2B stainless steel. Door handles shall be of tubular construction, chrome plated, not less than ¾" dia. and of proper length. Available in Vulcan Silvertone.

INSULATION: Sides, back and top shall be insulated with not less than 3" and doors with not less than 2" vitreous fiber insulation that shall be vermin and moisture proof and chemically, physically, and mechanically stable up to 1,000 degrees F. and shall not at any time contain voids; shall be packed at a homogenous density of not less than 2.5 pounds per cubic foot; shall have a thermal conductivity at a mean temperature of 75 degrees F. not exceeding 0.25 BTU per hour, per square foot, per inch, per degree F. and a heat capacity of not more than .075 BTU per degree F. per board foot. Ovens shall be unconditionally guaranteed against all insulation hazards.

BURNERS: There shall be two cast iron, one-piece burners with trailer arm for positive ignition. Each burner shall be individually controlled with heavy duty brass valve. Snap on, die cast valve handles shall be highly polished and supplied with set screw.

HEAT CONTROL: Each section shall be individually controlled by Robertshaw thermostat, heavy duty type equipped with steel capillary.

HEAT CIRCULATION: Oven shall be constructed with Multiple Heat Conduits designed to control and direct heat flow evenly to entire oven. Ovens shall be equipped with internal flue, scientifically baffled for tiering double or triple sections. Single draft divertor shall be of sufficient capacity for single, double or triple sections. Six inch flue collar shall be provided for installations where direct flue connection is desired.

BURNER CHAMBER: Burner chamber shall be equipped with hinged manifold door which shall provide access to burners, controls and valves without use of tools.

GAS CONNECTIONS: Each individual section is equipped with ¾" pipe inlet connection. When double or triple sections of ovens are required, rear manifold shall be provided for connection with 1¼" main gas supply.

LEGS: All legs are equipped with adjustable feet, for leveling ovens, and are supplied in the height as shown with detailed specifications on reverse side of this page.

GENERAL: All ovens shall be approved by American Gas Association in single or multiple sections.

Ovens may be mounted on solid type base of fire proof construction in place of legs, if desired.

Vulcan Sterling models shall have interior and exterior sheet steel parts of heavy gauge stainless, except the hearth which shall be of not less thon 11 ga. carbon steel. All interior and exterior parts shall be easily removed, without special tools, for cleaning or replacement.

AUTOMATIC OVEN LIGHTING: American Gas Association approved 100% safety pilot and automatic lighting shall be standard equipment on all ovens which bear the AGA seal of approval.

Provisions are made for steam injection and nozzles are furnished

Center removable shelf with adjustable vents in side linings can be furnished on 12" roasting sections at moderate additional cost.

LITHO IN U.S.A.

VULCAN

BAKING AND ROASTING OVENS

SPECIFICATIONS

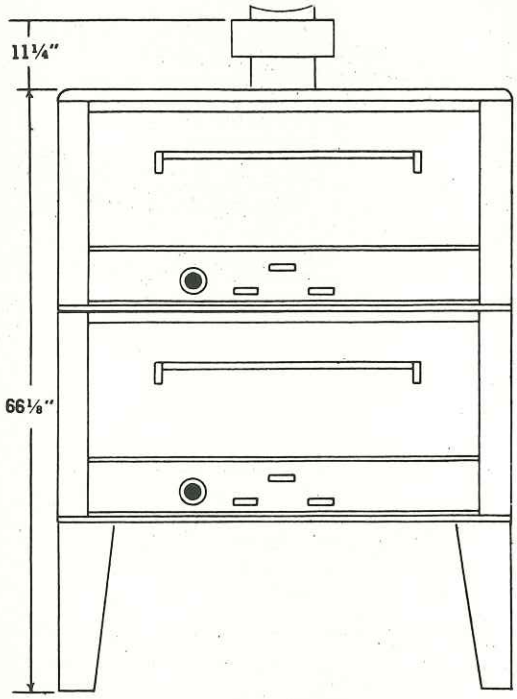

FRONT VIEW

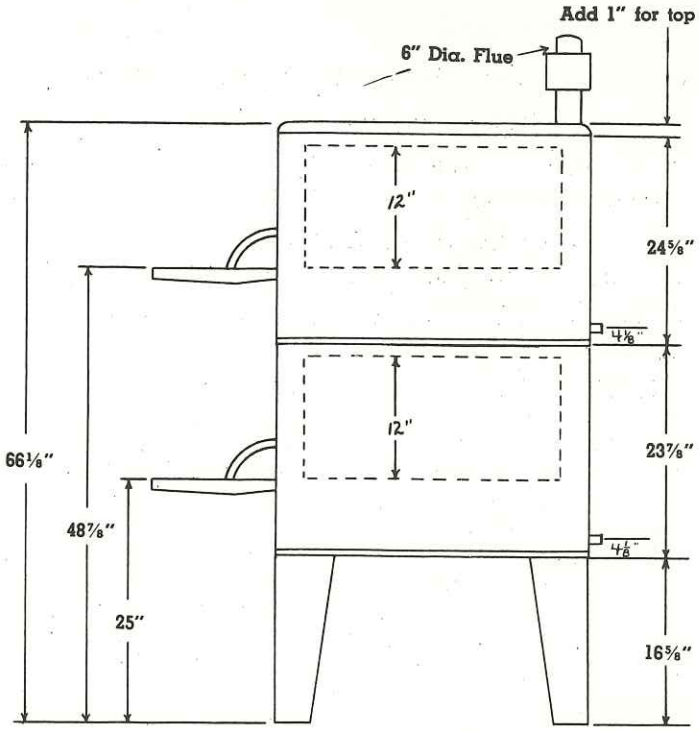

SIDE VIEW

*3" Minimum Space Between Adjacent units required for Secondary Air.

SPECIFICATIONS

Silvertone Finish or Vulcadur	No. 6099 ☐	No. 6077 ☐
Stainless Steel	No. 16099 ☐	No. 16077 ☐
No. of Sections	2	2
No. of Thermostatic Controls	2	2
No. of Compartments	2	2
Size of Compartments	42"x32"x12"	33"x22"x12"
Clearance below oven	16⅝"	16⅝"
Floor Space *	55½"x40"	46½"x30"
B. T. U. Input	100,000	54,000
Weight (crated) Total	1260 lbs.	950 lbs.
Weight Ea. Sect.	(2) 630 lbs.	(2) 475 lbs.

PAN CAPACITIES

18"x26" Bun Pans*	4	2
No. 200 Steam Table Pans*	8	4
10" Pie Pans*	24	12
19x4 Pullmans*	28	16
9½"x5 1-lb. Loaves	48	24
13x10 ½ Cup Tins*	18	8
No. 3 Bean Pots	40	16
5" Round Casseroles	96	48
20"x28" Roast Pans	4	2
25 lb. Turkeys	16	6-8

*Compartment capacity of 12" high roast section may be doubled for items marked when extra removable shelf is used.

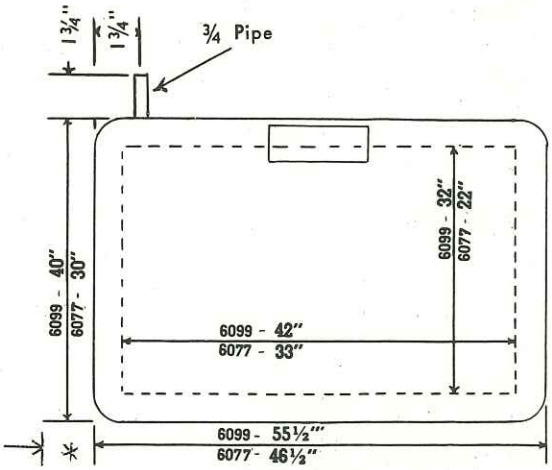

TOP VIEW

VULCAN • HART MANUFACTURING CO.

Factories and General Offices: BALTIMORE 22, MD. - LOUISVILLE 3, KENTUCKY

Sales Offices and Showrooms: NEW YORK • CHICAGO • LOS ANGELES
SAN FRANCISCO • BOSTON

In Canada: MOFFATS LTD., Weston, Ontario

HEAVY DUTY RANGES • BROILERS • BAKING OVENS
ROASTING OVENS • RESTAURANT RANGES • GRIDDLES
DEEP FAT FRYERS • FOOD WARMERS • ROLL WARMERS

VULCAN

Specifications; Ovens, Sectional, Gas-Fired

This specification is for Oven No.

In Silvertone or Vulcadur	☐ **6074A**	☐ **6096A**
In Stainless Steel	☐ **16074A**	☐ **16096A**

The oven checked above shall consist of . . . two separate sections, one 12" high roast compartment, two 7" high bake compartments.

Complete dimensional specifications on reverse side of this sheet.

GENERAL: The exterior parts of the body shall be not less than 18 ga. carbon steel or 20 ga. stainless steel mounted on continuous rigid angle frame of ⅛ x ⅞ x 1⅜ angle or 14 ga. ⅞ x 1⅜ stainless angle. Body shall be of bolted construction with front vertical corners reinforced by 14 ga. die formed sections.

Walls and tops of oven interior shall be constructed of not less than 20 ga. carbon steel with formed and welded reinforcing members. Hearth or deck shall be not less than 11 ga. carbon steel flanged up on sides and back and reinforced to prevent buckling.

DOORS: Doors shall be of all welded steel construction; shall have concealed hinges without cast moving parts; shall be counter-balanced without the use of springs and shall remain closed or horizontally opened until moved. Hinge pin bearing shall be of graphited bronze. Baking compartment doors shall be capable of supporting without permanent deformation a load of 125 pounds per square foot of door surface when opened.

FINISH: Standard finish shall be Baked Black Vulcadur. Interior linings shall have corrosion-resistant finish. Stainless steel units shall have external parts made of No. 4 polished stainless, and interior parts shall be No. 2B stainless steel. Door handles shall be of tubular construction, chrome plated, not less than ¾" dia. and of proper length. Available in Vulcan Silvertone.

INSULATION: Sides, back and top shall be insulated with not less than 3" and doors with not less than 2" vitreous fiber insulation that shall be vermin and moisture proof and chemically, physically, and mechanically stable up to 1,000 degrees F. and shall not at any time contain voids; shall be packed at a homogenous density of not less than 2.5 pounds per cubic foot; shall have a thermal conductivity at a mean temperature of 75 degrees F. not exceeding 0.25 BTU per hour, per square foot, per inch, per degree F. and a heat capacity of not more than .075 BTU per degree F. per board foot. Ovens shall be unconditionally guaranteed against all insulation hazards.

BURNERS: There shall be two cast iron, one-piece burners with trailer arm for positive ignition. Each burner shall be individually controlled with heavy duty brass valve. Snap on, die cast valve handles shall be highly polished and supplied with set screw.

HEAT CONTROL: Each section shall be individually controlled by Robertshaw thermostat, heavy duty type equipped with steel capillary.

HEAT CIRCULATION: Oven shall be constructed with Multiple Heat Conduits designed to control and direct heat flow evenly to entire oven. Ovens shall be equipped with internal flue, scientifically baffled for tiering double or triple sections. Single draft divertor shall be of sufficient capacity for single, double or triple sections. Six inch flue collar shall be provided for installations where direct flue connection is desired.

BURNER CHAMBER: Burner chamber shall be equipped with hinged manifold door which shall provide access to burners, controls and valves without use of tools.

GAS CONNECTIONS: Each individual section is equipped with ¾" pipe inlet connection. When double or triple sections of ovens are required, rear manifold shall be provided for connection with 1¼" main gas supply.

LEGS: All legs are equipped with adjustable feet, for leveling ovens, and are supplied in the height as shown with detailed specifications on reverse side of this page.

GENERAL: All ovens shall be approved by American Gas Association in single or multiple sections.

Ovens may be mounted on solid type base of fire proof construction in place of legs, if desired.

Vulcan Sterling models shall have interior and exterior sheet steel parts of heavy gauge stainless, except the hearth which shall be of not less thon 11 ga. carbon steel. All interior and exterior parts shall be easily removed, without special tools, for cleaning or replacement.

AUTOMATIC OVEN LIGHTING: American Gas Association approved 100% safety pilot and automatic lighting shall be standard equipment on all ovens which bear the AGA seal of approval.

Provisions are made for steam injection and nozzles are furnished

Center removable shelf with adjustable vents in side linings can be furnished on 12" roasting sections at moderate additional cost.

LITHO IN U.S.A.

VULCAN

BAKING AND ROASTING OVENS

SPECIFICATIONS

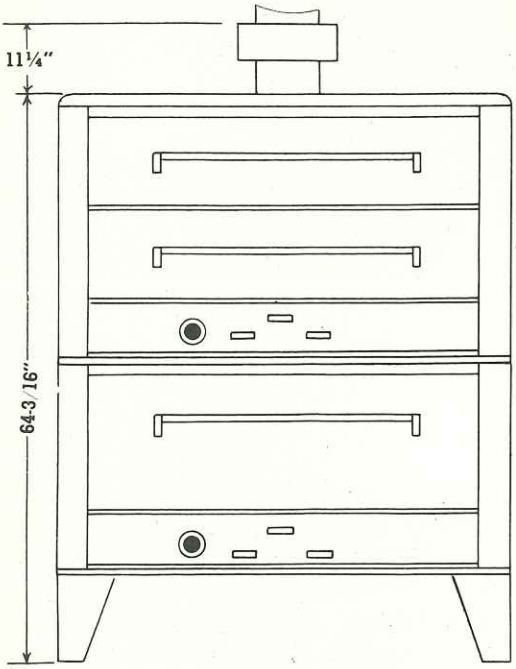

FRONT VIEW

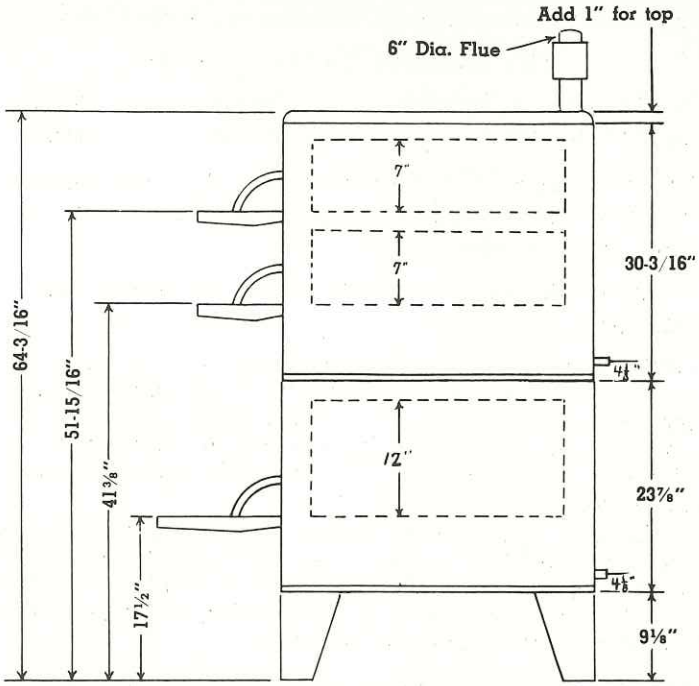

SIDE VIEW

*3" Minimum Space Between Adjacent units required for Secondary Air.

SPECIFICATIONS

Silvertone Finish or Vulcadur	No. 6096 ☐	No. 6074 ☐
Stainless Steel	No. 16096 ☐	No. 16074 ☐
No. of Sections	2	2
No. of Thermostatic Controls	2	2
No. of Compartments	3	3
Size of Compartments	(1) 42"x32"x12" (2) 42"x32"x7"	33"x22"x12" 33"x22"x7"
Clearance below oven	9⅛"	9⅛"
Floor Space ✳	55½"x40"	46½"x30"
B. T. U. Input	100,000	54,000
Weight (crated) Total	1405	1065
Weight Ea. Sect.	(1) 630 lbs. (1) 775 lbs.	(1) 475 lbs. (1) 590 lbs.

PAN CAPACITIES

18"x26" Bun Pans*	6	3
No. 200 Steam Table Pans*	12	6
10" Pie Pans*	36	18
19x4 Pullmans*	42	24
9½"x5 1-lb. Loaves	72	36
13x10 ½ Cup Tins*	27	12
No. 3 Bean Pots	60	24
5" Round Casseroles	144	72
20"x28" Roast Pans	6	3
25 lb. Turkeys	8	3-4

*Compartment capacity of 12" high roast section may be doubled for items marked when extra removable shelf is used.

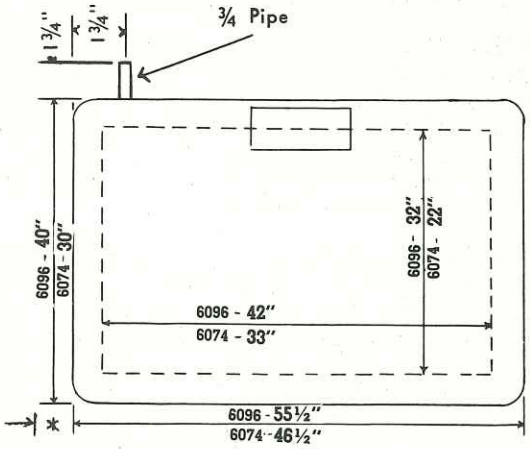

TOP VIEW

VULCAN • HART MANUFACTURING CO.

Factories and General Offices: BALTIMORE 22, MD. - LOUISVILLE 3, KENTUCKY

Sales Offices and Showrooms: NEW YORK • CHICAGO • LOS ANGELES SAN FRANCISCO • BOSTON

In Canada: MOFFATS LTD., Weston, Ontario

HEAVY DUTY RANGES • BROILERS • BAKING OVENS ROASTING OVENS • RESTAURANT RANGES • GRIDDLES DEEP FAT FRYERS • FOOD WARMERS • ROLL WARMERS

VULCAN

Specifications; Ovens, Sectional, Gas-Fired

This specification is for Oven No.

In Silvertone or Vulcadur	☐ **6054A**	☐ **6086A**
In Stainless Steel	☐ **16054A**	☐ **16086A**

The oven checked above shall consist of . . . two separate sections, three 7" high bake compartments.

Complete dimensional specifications on reverse side of this sheet.

GENERAL: The exterior parts of the body shall be not less than 18 ga. carbon steel or 20 ga. stainless steel mounted on continuous rigid angle frame of ⅛ x ⅞ x 1⅜ angle or 14 ga. ⅞ x 1⅜ stainless angle. Body shall be of bolted construction with front vertical corners reinforced by 14 ga. die formed sections.

Walls and tops of oven interior shall be constructed of not less than 20 ga. carbon steel with formed and welded reinforcing members. Hearth or deck shall be not less than 11 ga. carbon steel flanged up on sides and back and reinforced to prevent buckling.

DOORS: Doors shall be of all welded steel construction; shall have concealed hinges without cast moving parts; shall be counter-balanced without the use of springs and shall remain closed or horizontally opened until moved. Hinge pin bearing shall be of graphited bronze. Baking compartment doors shall be capable of supporting without permanent deformation a load of 125 pounds per square foot of door surface when opened.

FINISH: Standard finish shall be Baked Black Vulcadur. Interior linings shall have corrosion-resistant finish. Stainless steel units shall have external parts made of No. 4 polished stainless, and interior parts shall be No. 2B stainless steel. Door handles shall be of tubular construction, chrome plated, not less than ¾" dia. and of proper length. Available in Vulcan Silvertone.

INSULATION: Sides, back and top shall be insulated with not less than 3" and doors with not less than 2" vitreous fiber insulation that shall be vermin and moisture proof and chemically, physically, and mechanically stable up to 1,000 degrees F. and shall not at any time contain voids; shall be packed at a homogenous density of not less than 2.5 pounds per cubic foot; shall have a thermal conductivity at a mean temperature of 75 degrees F. not exceeding 0.25 BTU per hour, per square foot, per inch, per degree F. and a heat capacity of not more than .075 BTU per degree F. per board foot. Ovens shall be unconditionally guaranteed against all insulation hazards.

BURNERS: There shall be two cast iron, one-piece burners with trailer arm for positive ignition. Each burner shall be individually controlled with heavy duty brass valve. Snap on, die cast valve handles shall be highly polished and supplied with set screw.

HEAT CONTROL: Each section shall be individually controlled by Robertshaw thermostat, heavy duty type equipped with steel capillary.

HEAT CIRCULATION: Oven shall be constructed with Multiple Heat Conduits designed to control and direct heat flow evenly to entire oven. Ovens shall be equipped with internal flue, scientifically baffled for tiering double or triple sections. Single draft divertor shall be of sufficient capacity for single, double or triple sections. Six inch flue collar shall be provided for installations where direct flue connection is desired.

BURNER CHAMBER: Burner chamber shall be equipped with hinged manifold door which shall provide access to burners, controls and valves without use of tools.

GAS CONNECTIONS: Each individual section is equipped with ¾" pipe inlet connection. When double or triple sections of ovens are required, rear manifold shall be provided for connection with 1¼" main gas supply.

LEGS: All legs are equipped with adjustable feet, for leveling ovens, and are supplied in the height as shown with detailed specifications on reverse side of this page.

GENERAL: All ovens shall be approved by American Gas Association in single or multiple sections.

Ovens may be mounted on solid type base of fire proof construction in place of legs, if desired.

Vulcan Sterling models shall have interior and exterior sheet steel parts of heavy gauge stainless, except the hearth which shall be of not less thon 11 ga. carbon steel. All interior and exterior parts shall be easily removed, without special tools, for cleaning or replacement.

AUTOMATIC OVEN LIGHTING: American Gas Association approved 100% safety pilot and automatic lighting shall be standard equipment on all ovens which bear the AGA seal of approval.

Provisions are made for steam injection and nozzles are furnished

BAKING AND ROASTING OVENS

SPECIFICATIONS

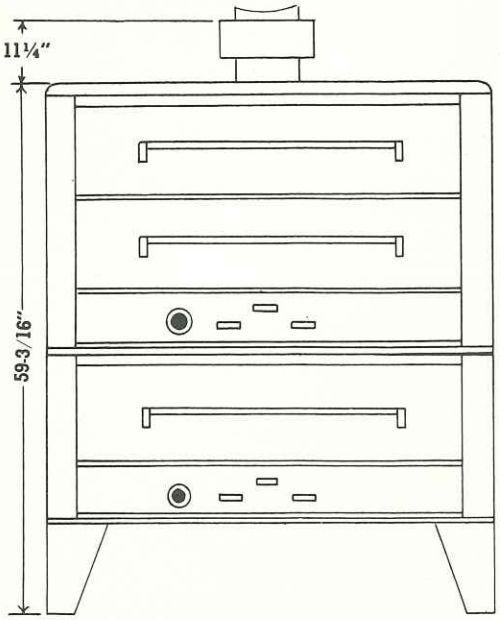

FRONT VIEW

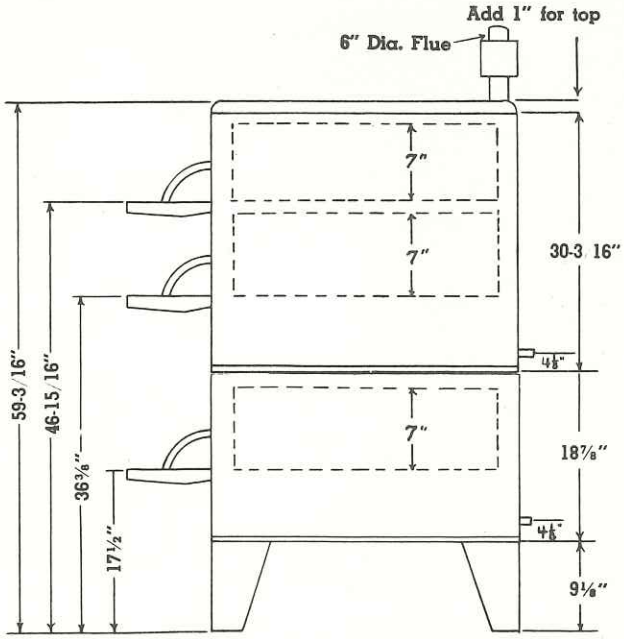

SIDE VIEW

*3" Minimum Space Between Adjacent units required for Secondary Air.

SPECIFICATIONS

Silvertone Finish or Vulcadur	No. 6086 ☐	No. 6054 ☐
Stainless Steel	No. 16086 ☐	No. 16054 ☐
No. of Sections	2	2
No. of Thermostatic Controls	2	2
No. of Compartments	3	3
Size of Compartments	42"x32"x7"	33"x22"x7"
Clearance below oven	9⅛"	9⅛"
Floor Space *	55½"x40"	46½"x30"
B. T. U. Input	90,000	47,000
Weight (crated) Total	1350 lbs.	1055 lbs.
Weight Ea. Sect.	(1) 575 lbs. (1) 775 lbs.	(1) 465 lbs. (1) 590 lbs.

PAN CAPACITIES

18"x26" Bun Pans	6	3
No. 200 Steam Table Pans	12	6
10" Pie Pans	36	18
19x4 Pullmans	42	24
9½"x5 1-lb. Loaves	72	36
13x10 ½ Cup Tins	27	12
No. 3 Bean Pots	60	24
5" Round Casseroles	144	72
20"x28" Roast Pans	6	3

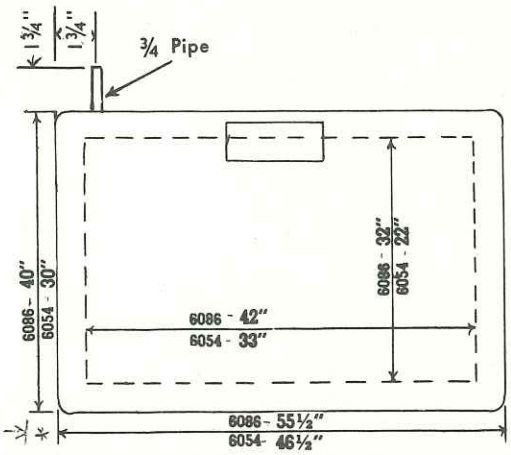

TOP VIEW

VULCAN • HART MANUFACTURING CO.

Factories and General Offices: BALTIMORE 22, MD. - LOUISVILLE 3, KENTUCKY

Sales Offices and Showrooms: NEW YORK • CHICAGO • LOS ANGELES
SAN FRANCISCO • BOSTON

In Canada: MOFFATS LTD., Weston, Ontario

HEAVY DUTY RANGES • BROILERS • BAKING OVENS
ROASTING OVENS • RESTAURANT RANGES • GRIDDLES
DEEP FAT FRYERS • FOOD WARMERS • ROLL WARMERS

VULCAN

Specifications; Ovens, Sectional, Gas-Fired

This specification is for Oven No.

In Silvertone or Vulcadur	☐ **6075A**	☐ **6098A**
In Stainless Steel	☐ **16075A**	☐ **16098A**

The oven checked above shall consist of . . . two separate sections, one 12" high roast compartment, one 7" high bake compartment.

Complete dimensional specifications on reverse side of this sheet.

GENERAL: The exterior parts of the body shall be not less than 18 ga. carbon steel or 20 ga. stainless steel mounted on continuous rigid angle frame of ⅛ x ⅞ x 1⅜ angle or 14 ga. ⅞ x 1⅜ stainless angle. Body shall be of bolted construction with front vertical corners reinforced by 14 ga. die formed sections.

Walls and tops of oven interior shall be constructed of not less than 20 ga. carbon steel with formed and welded reinforcing members. Hearth or deck shall be not less than 11 ga. carbon steel flanged up on sides and back and reinforced to prevent buckling.

DOORS: Doors shall be of all welded steel construction; shall have concealed hinges without cast moving parts; shall be counter-balanced without the use of springs and shall remain closed or horizontally opened until moved. Hinge pin bearing shall be of graphited bronze. Baking compartment doors shall be capable of supporting without permanent deformation a load of 125 pounds per square foot of door surface when opened.

FINISH: Standard finish shall be Baked Black Vulcadur. Interior linings shall have corrosion-resistant finish. Stainless steel units shall have external parts made of No. 4 polished stainless, and interior parts shall be No. 2B stainless steel. Door handles shall be of tubular construction, chrome plated, not less than ¾" dia. and of proper length. Available in Vulcan Silvertone.

INSULATION: Sides, back and top shall be insulated with not less than 3" and doors with not less than 2" vitreous fiber insulation that shall be vermin and moisture proof and chemically, physically, and mechanically stable up to 1,000 degrees F. and shall not at any time contain voids; shall be packed at a homogenous density of not less than 2.5 pounds per cubic foot; shall have a thermal conductivity at a mean temperature of 75 degrees F. not exceeding 0.25 BTU per hour, per square foot, per inch, per degree F. and a heat capacity of not more than .075 BTU per degree F. per board foot. Ovens shall be unconditionally guaranteed against all insulation hazards.

BURNERS: There shall be two cast iron, one-piece burners with trailer arm for positive ignition. Each burner shall be individually controlled with heavy duty brass valve. Snap on, die cast valve handles shall be highly polished and supplied with set screw.

HEAT CONTROL: Each section shall be individually controlled by Robertshaw thermostat, heavy duty type equipped with steel capillary.

HEAT CIRCULATION: Oven shall be constructed with Multiple Heat Conduits designed to control and direct heat flow evenly to entire oven. Ovens shall be equipped with internal flue, scientifically baffled for tiering double or triple sections. Single draft divertor shall be of sufficient capacity for single, double or triple sections. Six inch flue collar shall be provided for installations where direct flue connection is desired.

BURNER CHAMBER: Burner chamber shall be equipped with hinged manifold door which shall provide access to burners, controls and valves without use of tools.

GAS CONNECTIONS: Each individual section is equipped with ¾" pipe inlet connection. When double or triple sections of ovens are required, rear manifold shall be provided for connection with 1¼" main gas supply.

LEGS: All legs are equipped with adjustable feet, for leveling ovens, and are supplied in the height as shown with detailed specifications on reverse side of this page.

GENERAL: All ovens shall be approved by American Gas Association in single or multiple sections.

Ovens may be mounted on solid type base of fire proof construction in place of legs, if desired.

Vulcan Sterling models shall have interior and exterior sheet steel parts of heavy gauge stainless, except the hearth which shall be of not less thon 11 ga. carbon steel. All interior and exterior parts shall be easily removed, without special tools, for cleaning or replacement.

AUTOMATIC OVEN LIGHTING: American Gas Association approved 100% safety pilot and automatic lighting shall be standard equipment on all ovens which bear the AGA seal of approval.

Provisions are made for steam injection and nozzles are furnished

Center removable shelf with adjustable vents in side linings can be furnished on 12" roasting sections at moderate additional cost.

BAKING AND ROASTING OVENS

SPECIFICATIONS

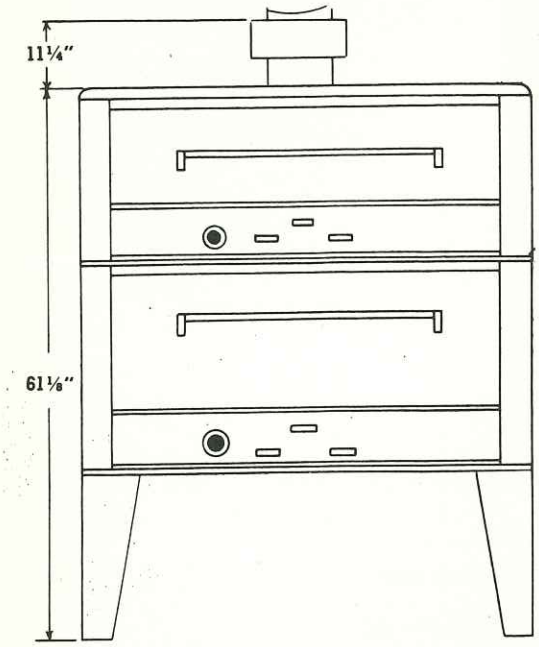

FRONT VIEW

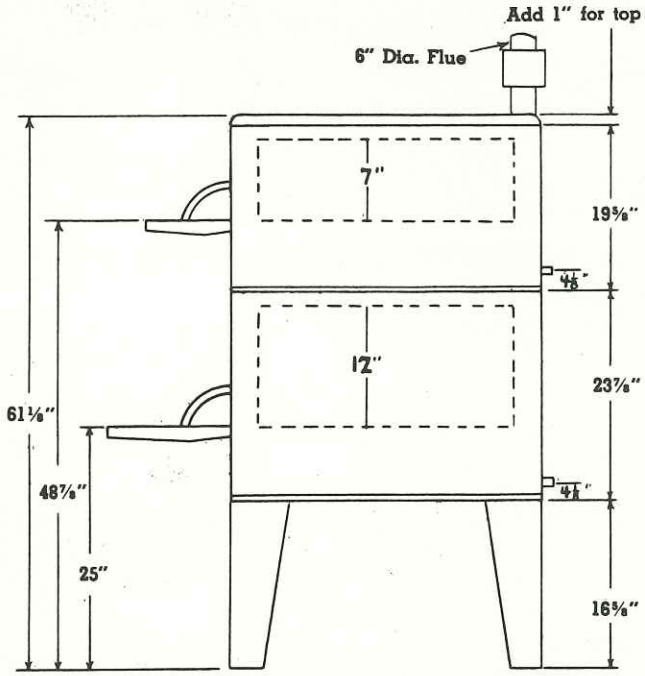

SIDE VIEW

*3" Minimum Space Between Adjacent units required for Secondary Air.

SPECIFICATIONS

Silvertone Finish or Vulcadur	No. 6098 ☐	No. 6075 ☐
Stainless Steel	No. 16098 ☐	No. 16075 ☐
No. of Sections	2	2
No. of Thermostatic Controls	2	2
No. of Compartments	2	2
Size of Compartments	(1) 42"x32"x12" (1) 42"x32"x7"	33"x22"x12" 33"x22"x7"
Clearance below oven	16⅝"	16⅝"
Floor Space *	55½"x40"	46½"x30"
B. T. U. Input	90,000	47,000
Weight (crated) Total	1205	940
Weight Ea. Sect.	(1) 630 lbs. (1) 575 lbs.	(1) 475 lbs. (1) 465 lbs.

PAN CAPACITIES

18"x26" Bun Pans*	4	2
No. 200 Steam Table Pans*	8	4
10" Pie Pans*	24	12
19x4 Pullmans*	28	16
9½"x5 1-lb. Loaves	48	24
13x10 ½ Cup Tins*	18	8
No. 3 Bean Pots	40	16
5" Round Casseroles	96	48
20"x28" Roast Pans	4	2
25 lb. Turkeys	8	2-4

*Compartment capacity of 12" high roast section may be doubled for items marked when extra removable section is used.

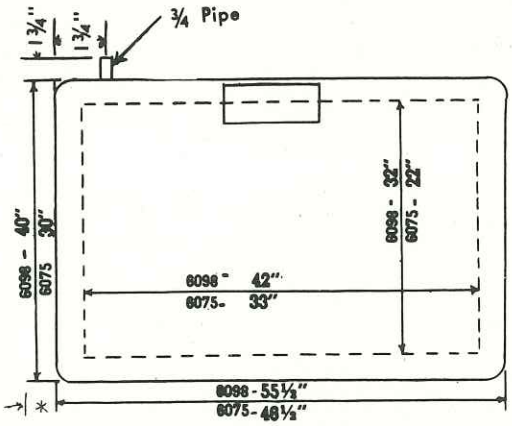

TOP VIEW

VULCAN • HART MANUFACTURING CO.

Factories and General Offices: BALTIMORE 22, MD. - LOUISVILLE 3, KENTUCKY

Sales Offices and Showrooms: NEW YORK • CHICAGO • LOS ANGELES
SAN FRANCISCO • BOSTON

In Canada: MOFFATS LTD., Weston, Ontario

HEAVY DUTY RANGES • BROILERS • BAKING OVENS
ROASTING OVENS • RESTAURANT RANGES • GRIDDLES
DEEP FAT FRYERS • FOOD WARMERS • ROLL WARMERS

VULCAN

Specifications; Ovens, Sectional, Gas-Fired

This specification is for Oven No.

In Silvertone or Vulcadur	☐ **6755A**	☐ **6988A**
In Stainless Steel	☐ **16755A**	☐ **16988A**

The oven checked above shall consist of . . . three separate sections, one 12" high roast compartment, two 7" high bake compartments.

Complete dimensional specifications on reverse side of this sheet.

GENERAL: The exterior parts of the body shall be not less than 18 ga. carbon steel or 20 ga. stainless steel mounted on continuous rigid angle frame of ⅛ x ⅞ x 1⅜ angle or 14 ga. ⅞ x 1⅜ stainless angle. Body shall be of bolted construction with front vertical corners reinforced by 14 ga. die formed sections.

Walls and tops of oven interior shall be constructed of not less than 20 ga. carbon steel with formed and welded reinforcing members. Hearth or deck shall be not less than 11 ga. carbon steel flanged up on sides and back and reinforced to prevent buckling.

DOORS: Doors shall be of all welded steel construction; shall have concealed hinges without cast moving parts; shall be counter-balanced without the use of springs and shall remain closed or horizontally opened until moved. Hinge pin bearing shall be of graphited bronze. Baking compartment doors shall be capable of supporting without permanent deformation a load of 125 pounds per square foot of door surface when opened.

FINISH: Standard finish shall be Baked Black Vulcadur. Interior linings shall have corrosion-resistant finish. Stainless steel units shall have external parts made of No. 4 polished stainless, and interior parts shall be No. 2B stainless steel. Door handles shall be of tubular construction, chrome plated, not less than ¾" dia. and of proper length. Available in Vulcan Silvertone.

INSULATION: Sides, back and top shall be insulated with not less than 3" and doors with not less than 2" vitreous fiber insulation that shall be vermin and moisture proof and chemically, physically, and mechanically stable up to 1,000 degrees F. and shall not at any time contain voids; shall be packed at a homogenous density of not less than 2.5 pounds per cubic foot; shall have a thermal conductivity at a mean temperature of 75 degrees F. not exceeding 0.25 BTU per hour, per square foot, per inch, per degree F. and a heat capacity of not more than .075 BTU per degree F. per board foot. Ovens shall be unconditionally guaranteed against all insulation hazards.

BURNERS: There shall be two cast iron, one-piece burners with trailer arm for positive ignition. Each burner shall be individually controlled with heavy duty brass valve. Snap on, die cast valve handles shall be highly polished and supplied with set screw.

VH-120-11

HEAT CONTROL: Each section shall be individually controlled by Robertshaw thermostat, heavy duty type equipped with steel capillary.

HEAT CIRCULATION: Oven shall be constructed with Multiple Heat Conduits designed to control and direct heat flow evenly to entire oven. Ovens shall be equipped with internal flue, scientifically baffled for tiering double or triple sections. Single draft divertor shall be of sufficient capacity for single, double or triple sections. Six inch flue collar shall be provided for installations where direct flue connection is desired.

BURNER CHAMBER: Burner chamber shall be equipped with hinged manifold door which shall provide access to burners, controls and valves without use of tools.

GAS CONNECTIONS: Each individual section is equipped with ¾" pipe inlet connection. When double or triple sections of ovens are required, rear manifold shall be provided for connection with 1¼" main gas supply.

LEGS: All legs are equipped with adjustable feet, for leveling ovens, and are supplied in the height as shown with detailed specifications on reverse side of this page.

GENERAL: All ovens shall be approved by American Gas Association in single or multiple sections.

Ovens may be mounted on solid type base of fire proof construction in place of legs, if desired.

Vulcan Sterling models shall have interior and exterior sheet steel parts of heavy gauge stainless, except the hearth which shall be of not less thon 11 ga. carbon steel. All interior and exterior parts shall be easily removed, without special tools, for cleaning or replacement.

AUTOMATIC OVEN LIGHTING: American Gas Association approved 100% safety pilot and automatic lighting shall be standard equipment on all ovens which bear the AGA seal of approval.

Provisions are made for steam injection and nozzles are furnished

Center removable shelf with adjustable vents in side linings can be furnished on 12" roasting sections at moderate additional cost.

LITHO IN U.S.A.

VULCAN

BAKING AND ROASTING OVENS

SPECIFICATIONS

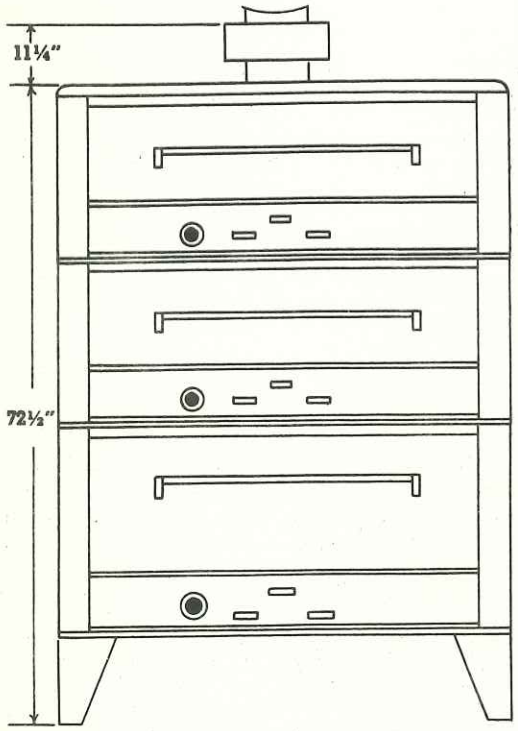

FRONT VIEW

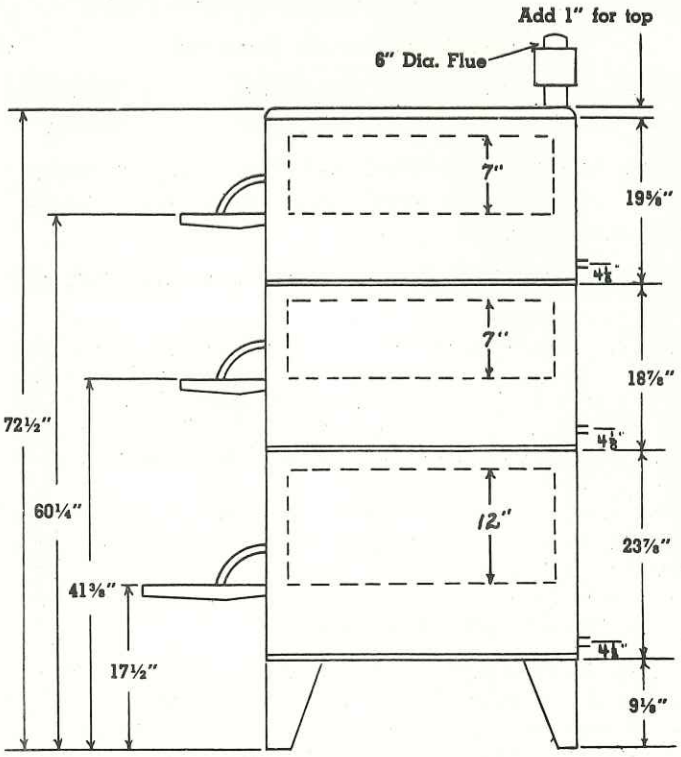

SIDE VIEW

*3" Minimum Space Between Adjacent units required for Secondary Air.

SPECIFICATIONS

Silvertone Finish or Vulcadur	No. 6988 ☐	No. 6755 ☐
Stainless Steel	No. 16988 ☐	No. 16755 ☐
No. of Sections	3	3
No. of Thermostatic Controls	3	3
No. of Compartments	3	3
Size of Compartments	(1) 42"x32"x12" (2) 42"x32"x7"	33"x22"x12" 33"x22"x7"
Clearance below oven	9⅛"	9⅛"
Floor Space *	55½"x40"	46½"x30"
B. T. U. Input	130,000	67,000
Weight (crated) Total	1780 lbs.	1405 lbs.
Weight Ea. Sect.	(1) 630 lbs. (2) 575 lbs.	(1) 475 lbs. (2) 465 lbs.

PAN CAPACITIES

18"x26" Bun Pans*	6	3
No. 200 Steam Table Pans*	12	6
10" Pie Pans*	36	18
19x4 Pullmans*	42	24
9½"x5 1-lb. Loaves	72	36
13x10 ½ Cup Tins*	27	12
No. 3 Bean Pots	60	24
5" Round Casseroles	144	72
20"x28" Roast Pans	6	3
25 lb. Turkeys	8	3-4

*Compartment capacity of 12" high roast section may be doubled for items marked when extra removable shelf is used.

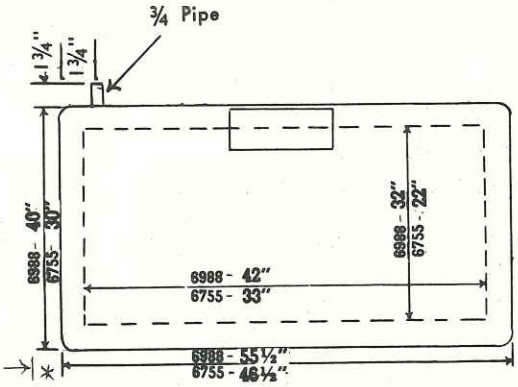

TOP VIEW

VULCAN • HART MANUFACTURING CO.

Factories and General Offices: BALTIMORE 22, MD. - LOUISVILLE 3, KENTUCKY

Sales Offices and Showrooms: NEW YORK • CHICAGO • LOS ANGELES
SAN FRANCISCO • BOSTON

In Canada: MOFFATS LTD., Weston, Ontario

HEAVY DUTY RANGES • BROILERS • BAKING OVENS
ROASTING OVENS • RESTAURANT RANGES • GRIDDLES
DEEP FAT FRYERS • FOOD WARMERS • ROLL WARMERS

VULCAN TILE LINED Pizza OVENS

Model 16030
Stainless Steel

STAINLESS STEEL

The new VULCAN Pizza Oven is also available in beautiful easy to clean stainless steel. This long lasting metal will pay for itself many times over in ease of cleaning and durability. Every VULCAN Pizza Oven is designed to give a lifetime of dependable service and unequalled performance.

Newer Better Faster

This new, improved, high-temperature VULCAN Pizza Oven is designed for high production of pizza. The superior performance of this oven is largely due to a system of Multiple Heat Conduits which direct flow of heat to every part of the oven, converting every square inch into baking surface.

THICK BAKERS' TILE at bottom holds heat even when oven is loaded or unloaded.

QUICK-HEATING. Burner design and multiple heat conduits bring saturation and baking temperatures with a minimum of fuel consumption, in a minimum of working time.

AUTOMATIC TEMPERATURE CONTROL. The new VULCAN Pizza Oven has automatic temperature control, reducing fuel consumption and food waste. Assures uniform, highest quality results, without guesswork. High heat thermostat regulates heat up to 700°. This high heat range is particularly desirable in the production of pizza.

THICK INSULATION. The new VULCAN Pizza Oven is thickly insulated to reduce heat and fuel losses, keep bake shop cooler and improve working conditions.

FASTER SPEED. Oven preheats unusually fast, saving time. More effective use of heat due to multiple heat conduits make this possible.

DISTINCTIVE APPEARANCE. Ovens are available in rich looking Vulcadur finish or stainless steel. Flush Front.

STRONGLY BUILT. Heavy gauge steel is used, well reinforced.

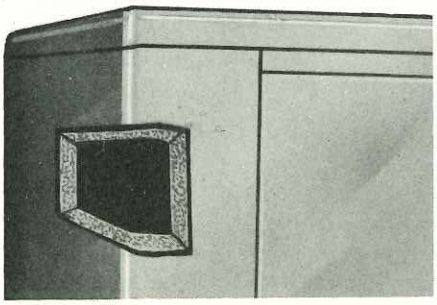

HEAVY INSULATION

Heavy insulation around the oven keeps heat inside oven and keeps bake shop cooler. Will improve working conditions.

Approved By The National Quality Pizzeria Association

Approved By The American Gas Association With Automatic Oven Lighting

Approved By Pizza Producers Everywhere

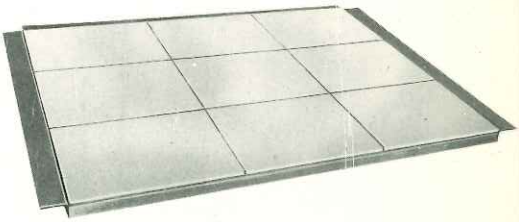

TILE DECK

In the new VULCAN Pizza Oven even heat is maintained by the thick Baker Tile at the bottom. This assures the user of even heat distribution when the oven is loaded or unloaded. This big deck has large capacity.

LITHO IN U.S.A.

VULCAN • HART MANUFACTURING CO., Baltimore • Louisville

VULCAN

TILE LINED *Pizza* OVENS

SPECIFICATIONS

Number—Stainless Steel	16030
Number—Vulcadur Finish	6030
Dimensions (Overall)	
Wide	60¾″
Deep (incl. flue)	40″
High (without legs)	19⅞″
Dimensions (Inside)	
Wide	42″
Deep	32″
High	7″
Weight (crated) lbs.	670
B.T.U. Input	50,000
Standard with safety shut-off	

*3″ Minimum Space Between Adjacent units required for Secondary Air.

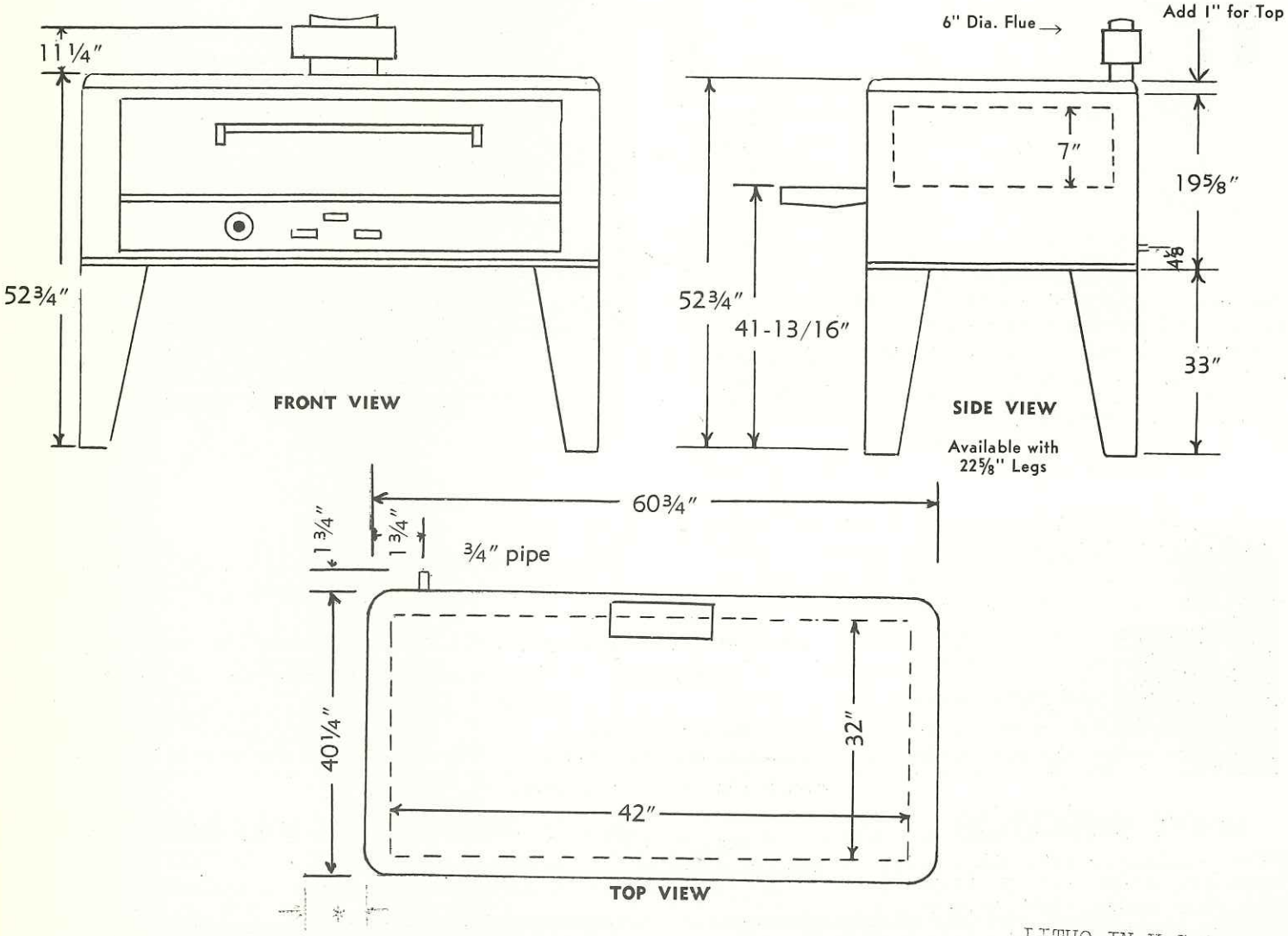

LITHO IN U S A

VULCAN-HART MANUFACTURING COMPANY, INCORPORATED

3600 North Point Blvd.
BALTIMORE 22, MARYLAND

164 S. Central
LOS ANGELES 12, CALIFORNIA

420 Market Street
SAN FRANCISCO, CALIFORNIA

VULCAN

4-DECK BAKE OVENS

16761—6761—16762—6762 Series

IN

Silvertone

FINISH

AMERICAN GAS ASSOCIATION APPROVED · COMPLIES WITH NATIONAL SAFETY REQUIREMENTS

CAPACITY—No. 6761 has a deck area of 17½ square feet and will hold 48 1-lb. loaves or 24 10" pies. The No. 6762 has a deck area of 33⅞ square feet and will hold 96 1-lb loaves or 48 10" pies.

FINISH—The ovens have been improved in appearance by being finished with modern distinctive SILVER-TONE finish, a new silicone finish exclusive with VULCAN. Also available in stainless steel. Also available in Black Vulcadur.

INSULATION—All sides and top of the oven are thickly insulated with the best insulation obtainable. This reduces heat loss by radiation to a minimum and helps give a very even distribution of moist heat in the oven.

HEAT CONTROL—A simple, dependable, accurate oven heat control is set to whatever degree of heat is required for the food to be baked, and the temperature at which control is set is automatically maintained during the entire baking period. One heat control is used to control heat on all four decks.

The oven heat control saves gas, for just enough gas — and no more — is used to maintain the temperature required. It also saves considerable time for the baker and frees him for other work, as he does not have to watch his oven constantly. A metal chart on oven front indicates correct temperature for a variety of foods.

SAFETY SHUT OFF—A safety shut off valve is furnished as standard equipment at no extra cost.

OVEN DOORS—Sturdily constructed and properly counterbalanced. No springs are used.

ACCESSIBILITY—Lower front is hinged for easy accessibility to burners, valves, safety shut-off, and other fittings.

CONSTRUCTION—Sturdily built with heavy gauge steel and well reinforced throughout.

MINUTE MINDER—Available as a low cost extra if desired.

SPECIFICATIONS—Dimensional drawings and complete specifications on reverse side.

AUTOMATIC LIGHTING — STANDARD EQUIPMENT

VULCAN·HART MANUFACTURING CO. 3600 NORTH POINT BLVD., BALTIMORE 22, MARYLAND

VULCAN

4-DECK BAKE OVENS

SPECIFICATIONS

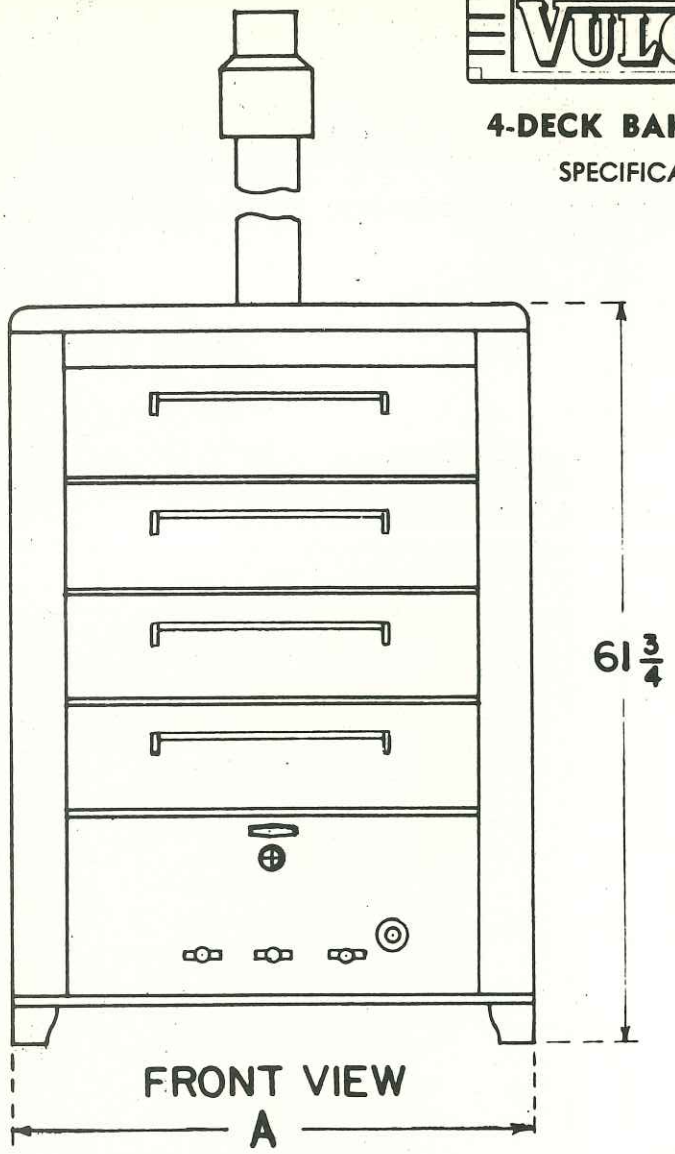

*3" Minimum Space Between Adjacent units required for Secondary Air.

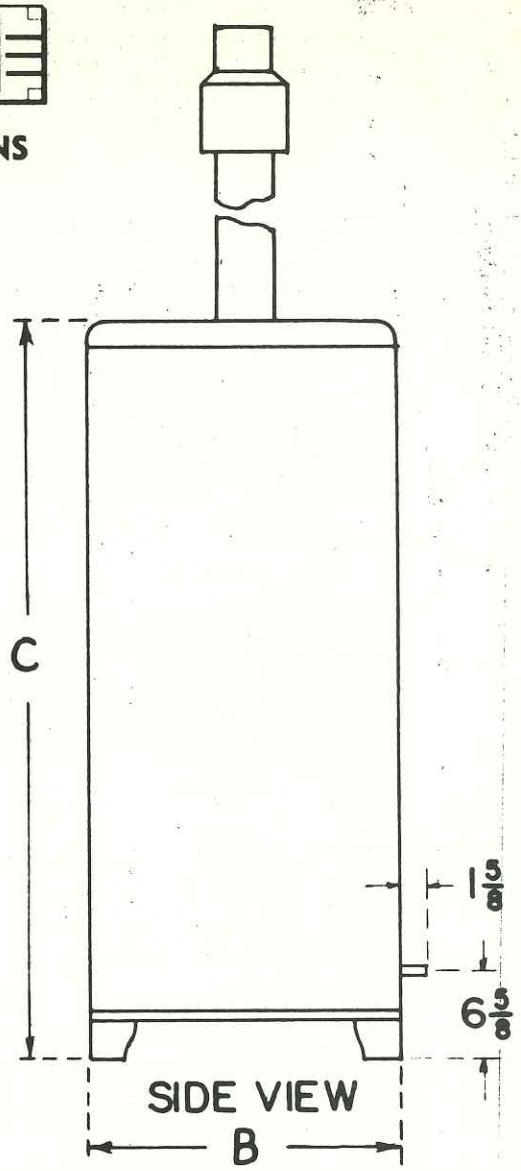

SPECIFICATIONS

Silvertone Finish or Vulcadur	No. 6761	No. 6762
Stainless Steel*	No. 16761*	No. 16762*
Code	Dale	Dell
No. of Decks	4	4
Capacity: Deck Area	17½ Sq. Ft.	33⅞ Sq. Ft.
1 lb. Loaves	48	96
10" Pies	24	48
Pre-Heating For Bread Baking	35-45 Minutes	40-50 Minutes
No. of Burners	3	3
No. of Pilots	1	1
Size of Manifold	½"	¾"
Gas Consumption B.T.U.'s Per Hour	16,000 Ea. Burner	24,000 Ea. Burner
Dimensions		
Outside Width (A)	42-3/16"	51-3/16"
Outside Depth (B)	25-3/16"	35-3/16"
Outside Height (C)	61-3/4"	61-3/4"
Inside Deck Width	31-13/16"	40-13/16"
Inside Deck Depth	19-7/8"	29-7/8
Inside Deck Height	7	7
Shipping Weight	775 Lbs.	1100 Lbs.

Stainless Exterior Finish ONLY, i.e., Front, Top, Sides, Legs and Draft Diverter ONLY.

Safety Shut Off Valve Standard Equipment.

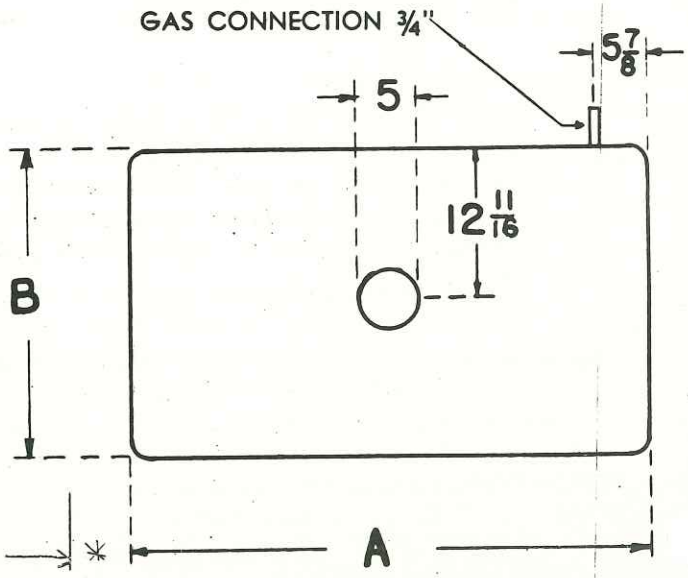

TOP VIEW

ABOVE DIMENSIONS LESS HANDLES

HANDLES ADD 2⅝" TO DEPTH

VULCAN
BAKERS AND STOCK POT STOVES

MODEL 6526

MODEL 6527

The Bakers & Stock Pot Stove is sometimes referred to in the trade as: confectioners stove, candy stove, doughnut stove, frying stove, utility stove or boiling stove.

The new VULCAN Bakers & Stock Pot Stove still retains the fine features of the older model but is newly designed to give modern appearance and to blend in with modern cooking equipment.

BODY: The body shall be constructed of heavy gauge sheet steel, formed and bolted together with concealed fasteners to form a rigid body which serves both to support the top and the burner and to form a properly designed combustion chamber.

FINISH: Black baked enamel on the exterior. Corrosion resistant bright finish manifold panel and valve handles. **Also available in beautiful stainless steel**

INSULATION: Combustion chamber shall be lined with durable, rigid type insulating material.

BURNERS: Highly efficient, properly designed multiple port three ring cast iron burner. Each ring separately controlled. Burner ignited from low input pilot burner.

GAS CONNECTIONS: Gas connections shall be 1" pipe.

LEGS: Legs shall be formed of heavy gauge steel, removable for shipping and securely fastened to body by easily applied bolts.

TOPS: Tops shall be of cast iron, ribbed on underside for strength and efficient operation. Model 6526 has one removable ring and lid; Model 6527 has five removable rings and lid.

SERVICE: Valves, air shutters, etc. shall be accessible for cleaning and adjustment. Valve handles are recessed in body for protection.

FLUE BOX: Flue box shall have built in draft diverter with flue collar to receive 8" diameter flue pipe. Recommend connecting to a 6" flue with 8" to 6" reducer.

BAKERS AND STOCK POT STOVES

SPECIFICATIONS

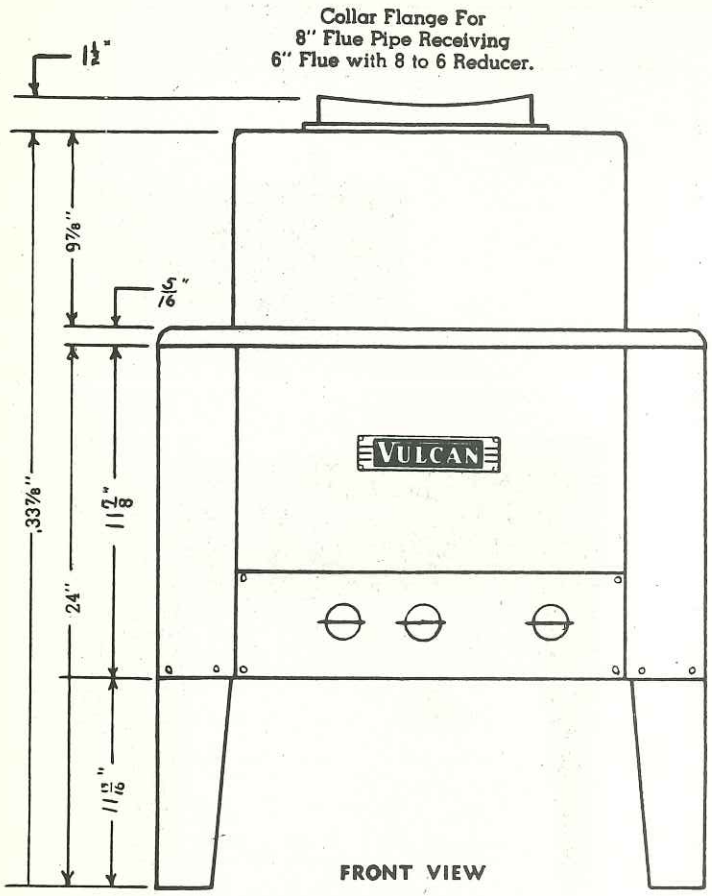

FRONT VIEW

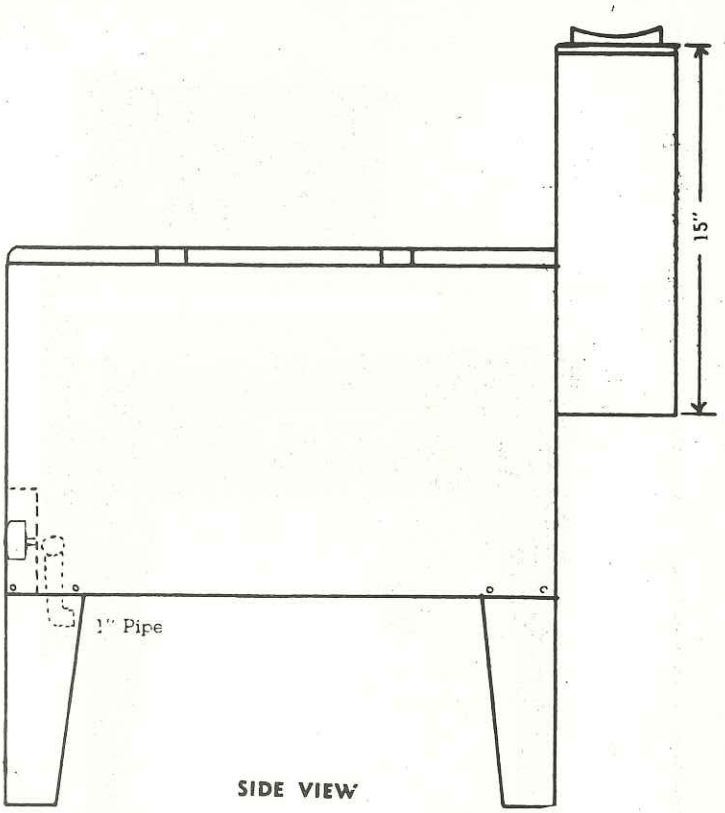

SIDE VIEW

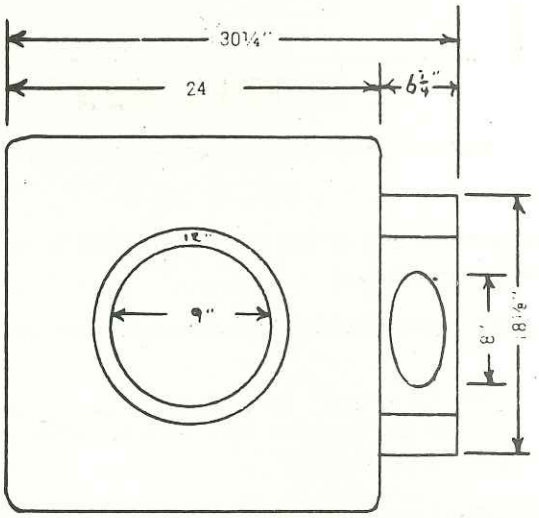

MODEL 6526

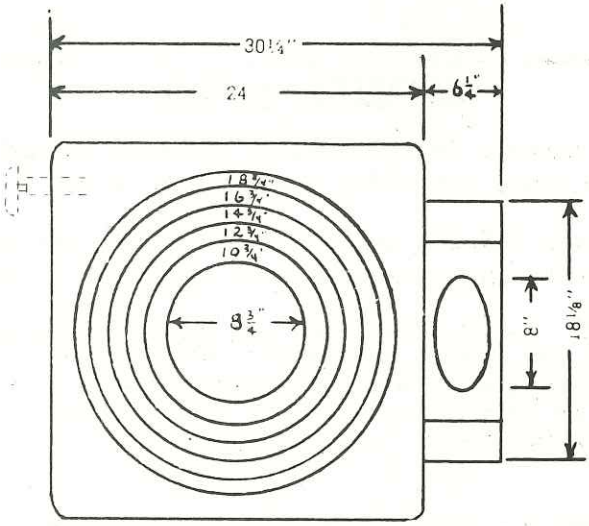

MODEL 6527

Finish	Black Baked Enamel	**Dimensions** Width	24"
Gas Consumption (3 ring burner)		Depth of Top	24"
Inner Ring	18,000 B.T.U.s Per Hour	Overall Depth	30¼"
Middle Ring	32,000 B.T.U.s Per Hour	Height to Top	24"
Outer Ring	50,000 B.T.U.s Per Hour	Height to top of flue box	34"
Total	100,000 B.T.U.s Per Hour	Flue connection for 8" flue pipe	(use 8" to 6" flue pipe reducer)
Size of gas connection	1"	Weight	170 lbs.
		Shipping Weight	190 lbs.

100% safety shut-off available at extra cost

COUNTER
EQUIPMENT (GAS)

HART RESTAURANT RANGES

For every cooking need

Lowest Price

Highest Quality

Approved By N.S.F.

Most Economical Operation

Approved By A.G.A.

World's Finest Cooking Equipment

Now- HART gives you a new low priced restaurant range

Here are four new Hart restaurant ranges that should fit the requirements of small restaurants, schools, clubs, churches and other places where space is limited but a variety of short order cooking facilities are needed — general cooking, baking and roasting.

The new Hart restaurant range can do all of these things and although reasonable in price, the famous Hart quality is in each and every one.

The new Hart restaurant range is styled and designed for more efficient operation. Savings made by greater operating efficiency and durability should soon pay for this fine equipment. The unusually rugged construction assures years of satisfactory service even under the most severe usage.

LITHO IN U. S. A.

The New HART Restaurant Ranges

MODEL NO. H-101-L

Model H-101-L With Automatic Oven Lighting

Six top burners. Large 26" oven — fully insulated — thermostatically controlled. Automatic top burner lighting. Convenient front plate bar.

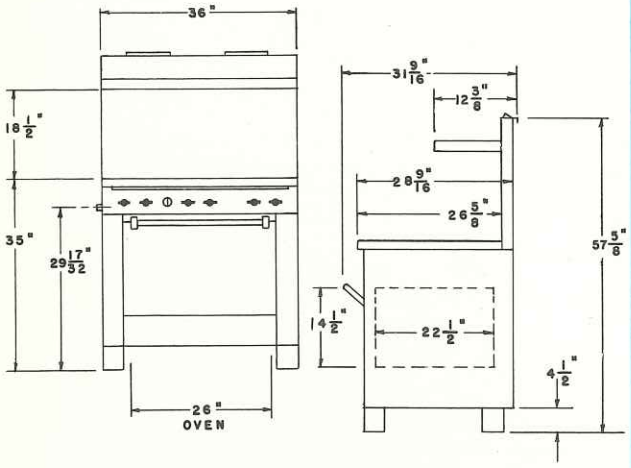

FRONT VIEW

SIDE VIEW

MODEL NO. H-102-L

Model H-102-L With Automatic Oven Lighting

Ten top burners. Two large 26" ovens — fully insulated — thermostatically controlled. Automatic top burner lighting. Convenient front bar plate.

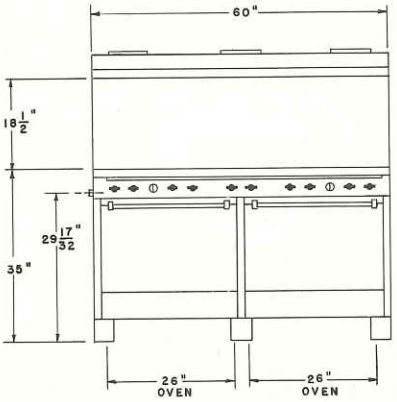

FRONT VIEW

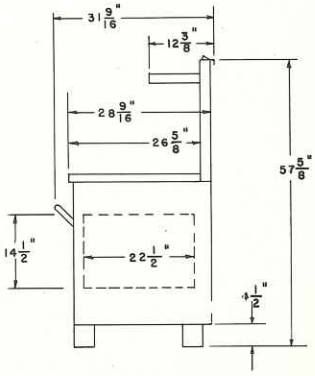

SIDE VIEW

No. H-101-L Specifications

Overall Size	36" wide, 31" deep, 57 5/8" high
Cooking Surface	36" wide, 26 5/8" deep, 35" high
Oven Size	26" wide, 22 1/2" deep, 14 1/2" high
1" gas Connection	
Open Burners	6 @ 15,000 B.T.U.'s
Oven Burner	25,000 B.T.U.'s
Total B.T.U.'s	115,000

Available for any type gas—natural, mixed and L.P.

No. H-102-L Specifications

Overall Size	60" wide, 31" deep, 57 5/8" high
Cooking Surface	60" wide, 26 5/8" deep 35" high
Oven Size—(2)	26" wide, 22 1/2" deep, 14 1/2" high
1" gas Connection	
Open Burners	10 @ 15,000 B.T.U.'s
Oven Burners	2 @ 25,000 B.T.U.'s
Total B.T.U.'s	200,000

Available for any type gas—natural, mixed and L.P.

STYLED AND ENGINEERED FOR COOKING FLEXIBILITY AND DOLLAR FOR DOLLAR VALUE.

Model H-103-L With Automatic Oven Lighting

Six top burners. Large 26" oven — fully insulated — thermostatically controlled. Heavy 24" cast iron griddle with large convenient grease catch. Large 21" broiler (Ceramic radiants available at slight additional cost).

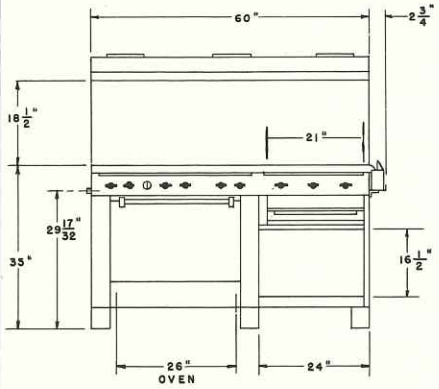

FRONT VIEW

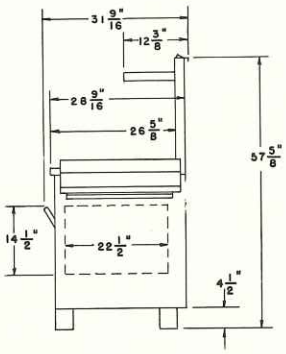

SIDE VIEW

No. H-103-L Specifications

Overall Size	63" wide, 31" deep, 57⅝" high
Cooking Surface	36" wide, 26⅝" deep, 35" high
Griddle	24" wide, 24" deep, 35" high
Oven Size—(1)	26" wide, 22½" deep, 14½" high
Broiler Opening	21" wide
1" gas Connection	
Open Burners	6 @ 15,000 B.T.U.'s
Oven Burner	25,000 B.T.U.'s
Broiler Burners	3 @ 12,000 B.T.U.'s
Total B.T.U.'s	151,000

Available for any type gas—natural, mixed and L.P.

Model H-104-L With Automatic Oven Lighting

Six top burners. Two large 26" ovens — fully insulated — thermostatically controlled. Heavy 24" cast iron griddle with large convenient grease catch. Large 21" broiler (Ceramic radiants available at slight additional cost).

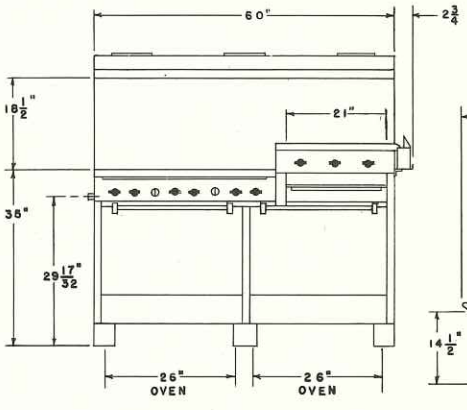

FRONT VIEW

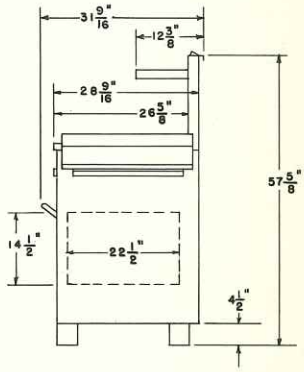

SIDE VIEW

No. H-104-L Specifications

Overall Size	63" wide, 31" deep, 57⅝" high
Cooking Surface	36" wide, 26⅝" deep, 35" high
Griddle	24" wide, 24" deep, 41" high
Oven Size—(2)	26" wide, 22½" deep, 14½" high
Broiler Opening	21" wide
1" gas Connection	
Open Burners	6 @ 15,000 B.T.U.'s
Oven Burners	2 @ 25,000 B.T.U.'s
Broiler Burners	3 @ 12,000 B.T.U.'s
Total B.T.U.'s	176,000

Available for any type gas—natural, mixed and L.P.

Here is why the new **HART** *restaurant range is tops in its field . . . .*

Heavy, well braced high shelf and splash back with 9¾" wide plate shelf.

Heavy gauge aeration plate, cast iron grates.

Sturdy front plate rest.

Heavy unbreakable valve handles, highly polished.

Thermostatically controlled heat, 550° to 250°.

Unbreakable hinges operate smoothly and efficiently.

Heavy 2" thick, insulated oven door assures uniform heat distribution.

Extra large full 26" width ovens — enameled and fully insulated top, bottom and sides.

Full 24" highly polished cast iron griddle, designed for longer life.

Large grease receptacle is easily removed by sliding forward.

Heavy duty, smooth sliding, broiler grid is adjustable to any of three heights.

Extra width 21" broiler section (Ceramic radants available at slight additional cost).

Extra heavy oven rack, adjustable to three heights.

Sturdy highly polished oven door handles.

Non clog burners; instant top lighting; heat from broilers burners heats griddle; large top cooking surface and beautiful black baked enamel finish.

Every Hart restaurant range described on these pages have passed the requirements of the American Gas Association Laboratory and provide the ultimate in quality, design and operating efficiency.

VULCAN-HART MANUFACTURING CO.

2006 NORTH WESTERN PKWY. LOUISVILLE 3, KENTUCKY

HART

LUNCHEONETTE *in* STAINLESS STEEL

Also Available in
Black Baked Enamel

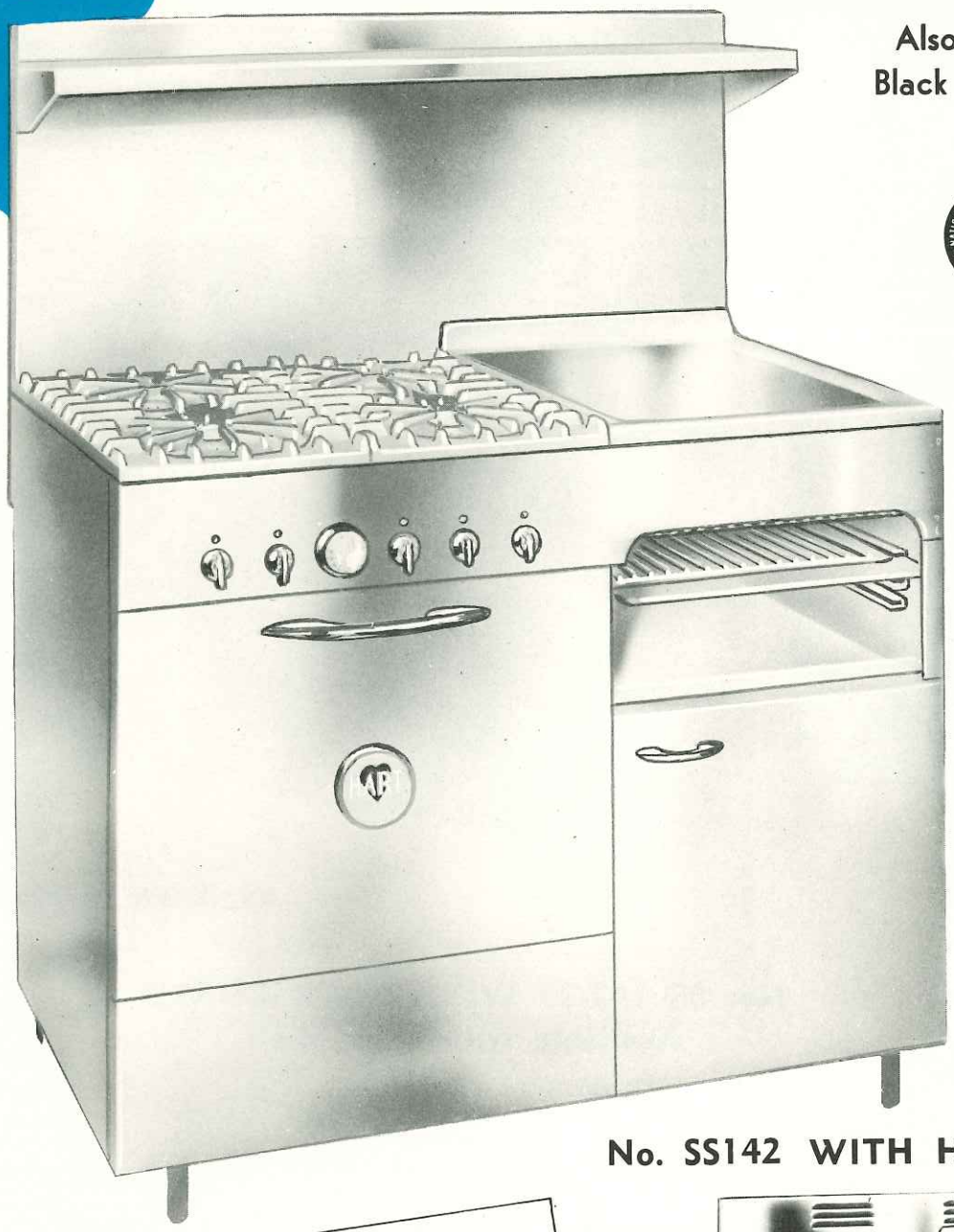

No. SS142 WITH HIGH SHELF

Features...

- ★ Full size ceramic boiler
- ★ Heavy cast iron griddle plate
- ★ Full 22" porcelain enameled oven
- ★ Universal valves that can be adjusted for any type gas

No. SS 142
WITH BACK GUARD

VULCAN·HART MANUFACTURING CO.
2006 NORTH WESTERN PARKWAY LOUISVILLE 3, KY.

HART STAINLESS STEEL LUNCHEONETTE

Available in Black Baked Enamel

No. SS 142-30 WITH BACK GUARD
Available with High Shelf

For Automatic Oven Lighting (An A.G.A. Requirement) Add Suffix "L"

SPECIFICATIONS

	Model No. 142	Model No. 142-30	Model No. SS 142	Model No. SS 142-30
Finish	Black Enamel	Black Enamel	Stainless Steel	Stainless Steel
Actual Floor Space	42" x 23½"	42" x 23½"	42" x 23½"	42" x 23½"
Oven Size	22" W, 15" H, 18" D	22" W, 15" H, 18" D	22" W, 15" H, 18" D	22" W, 15" H, 18" D
Cooking Surface	42" x 20"	42" x 20"	42" x 20"	42" x 20"
Griddle Size	18" x 20"	30" x 20"	18" x 20"	30" x 20"
Size of Burner Top	24" x 20"	12" x 20"	24" x 20"	12" x 20"
Height, Floor to Cooking Top	35⅛"	35⅛"	35⅛"	35⅛"
Height, (Overall) Including High Shelf	54"	54"	54"	54"
Broiler Size	16" x 15"	16" x 15"	16" x 15"	16" x 15"
Manifold Pipe Size	¾"	¾"	¾"	¾"
Approx. Shipping Weight, lbs.	365	365	365	365
No. of Top Burners	4	2	4	2
Top Burner B.T.U. hr. each	12,000	12,000	12,000	12,000
No. of Griddle Burners	2	3	2	3
Griddle Burner B.T.U. hr. each	12,000	12,000	12,000	12,000
1 Oven Burner B.T.U. hr. each	20,000	20,000	20,000	20,000
Total Input B.T.U. hr.	92,000	80,000	92,000	80,000

HART

HEAVY DUTY GRIDDLES

for more . . . more often!

DESIGNED TO FIT EVERY JOB—LARGE OR SMALL

The new HART Heavy Duty Griddle was designed after much research by HART engineers to meet the requirements of establishments that have a need for a griddle that can produce volume and yet hold up under continuous use.

GRIDDLE: Heavy ¾" thick steel plate; machine ground and highly polished. Will withstand the most severe use.

BURNERS: Heavy cast iron burners arranged to give more uniform heat distribution. B.T.U. rating of 16000 each.

VALVES: Each burner is controlled by an individual valve made of cast brass and approved by the American Gas Association.

VALVE HANDLES: Non-breakable black enameled steel.

GREASE TROUGH: Extends full width of griddle in front of griddle plate. Large grease chute in center of trough empties into large vitreous enameled grease catch.

BACK SPLASH: 4" high back splash extends around both sides and back to prevent excessive splashing of grease.

BODY: Made of heavy gauge steel, well constructed and braced throughout: finished in black baked enamel.

MANIFOLD: One inch manifold has provision for gas supply at either end.

MANIFOLD COVER: Manifold cover is made of beautiful stainless steel.

PILOTS: All HART Heavy Duty Griddles are equipped with constant burning pilots.

STANDS: Legs and bottom shelf are constructed of extra heavy steel; finished in black baked enamel.

Stand shipped knocked down, simple assembly; for slight additional charge stands can be fully assembled to griddle when shipped.

Model No. 748-1

ALL HART Heavy Duty Griddles are available with thermostatic control (one thermostat controls two burners). The units are available in three sizes — 36", 48", and 60".

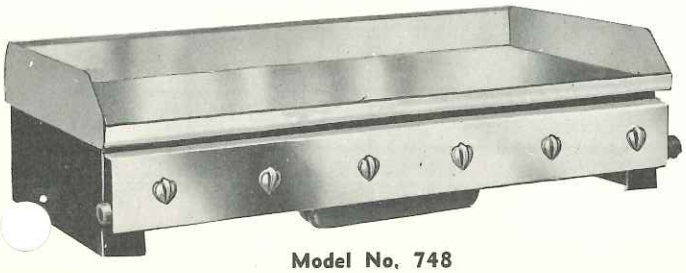

Model No. 748

All of the HART Heavy Duty Griddles are available without stands for counter use. Each has the same features and construction of the stand models and are available in 36", 48", and 60" widths.

VULCAN·HART MANUFACTURING CO. 2006 NORTH WESTERN PARKWAY LOUISVILLE 3, KY.

HART

HEAVY DUTY GRIDDLES

NEWEST ADDITION TO THE FAMOUS LINE OF HART GRIDDLES

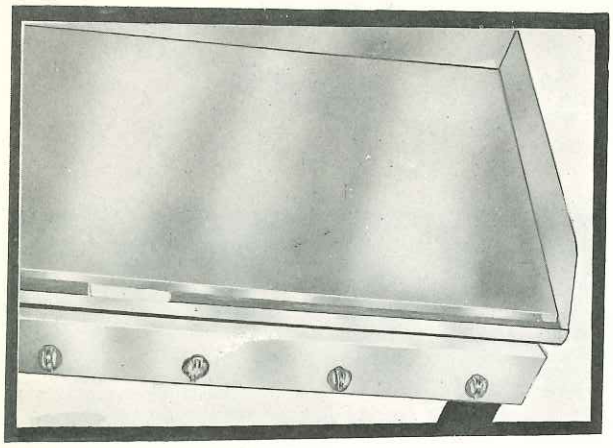

GREASE TROUGH: Extends full width of griddle in front of griddle plate. Large grease chute in center of trough empties into large vitreous enameled grease catch.

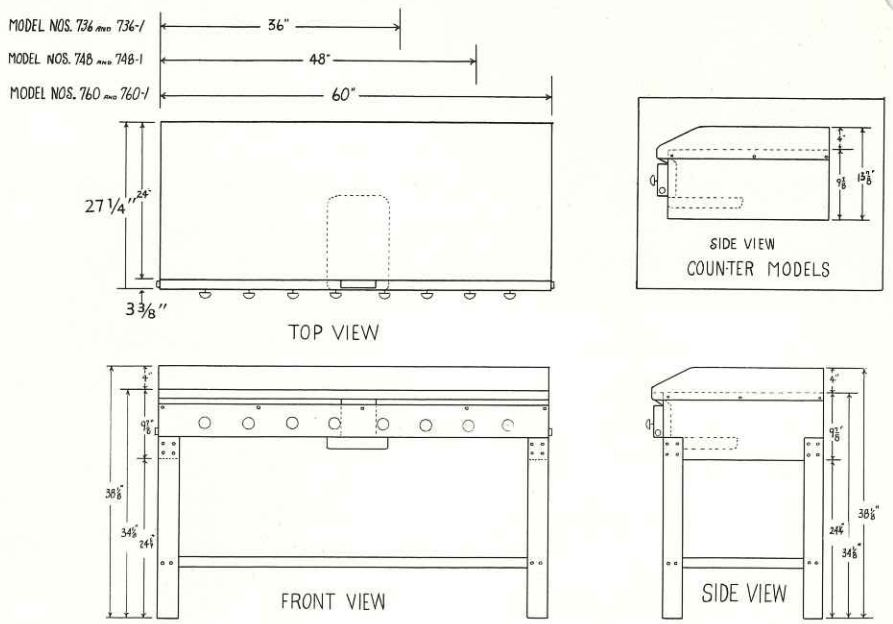

AVAILABLE FOR ANY TYPE GAS —PLEASE SPECIFY WHEN ORDERING

2-open burners may be added at either end—Add 12" to width

4-open burners may be added at either end—Add 24" to width

SPECIFICATIONS

Model No.	736	736-1	748	748-1	760	760-1
Overall Width	36"	36"	48"	48"	60"	60"
Overall Depth	27 1/4"	27 1/4"	27 1/4"	27 1/4"	27 1/4"	27 1/4"
Overall Height	13 3/4"	38 1/8"	13 3/4"	38 1/8"	13 3/4"	38 1/8"
Height to top of Griddle	9 7/8"	34 1/8"	9 7/8"	34 1/8"	9 7/8"	34 1/8"
Griddle Width	36"	36"	48"	48"	60"	60"
Griddle Depth	24"	24"	24"	24"	24"	24"
Griddle Thickness	3/4"	3/4"	3/4"	3/4"	3/4"	3/4"
No. of Burners	4	4	6	6	8	8
Weight, each	330	375	430	480	525	580
If Thermostatically Controlled —Number of Thermostats	2	2	3	3	4	4

HART

MAKES THE WORLD'S FINEST COOKING EQUIPMENT

HART

Thermogrid

Thermostatically Controlled Stainless Steel Griddle

A name that is praised by commercial users everywhere, "Thermogrid" is the trademark of the Hart Thermostatically Controlled Griddle — the newest addition to the Hart line of counter appliances.

Some of the features of the Model No. 636 "Thermogrid" are: 2 Robertshaw Thermostats, each regulating one-half of the heavy cast iron 36" x 20" griddle plate with built in back splash; constant pilot lights and observation ports; beautiful, gleaming, stainless steel exterior; large, porcelain enameled grease pan; 4 heavy cast iron trombone type burners.

The "Thermogrid can be combined with any of the 500 Series Griddles or open burner units in a variety of arrangements.

MODEL No. 636
THERMOGRID

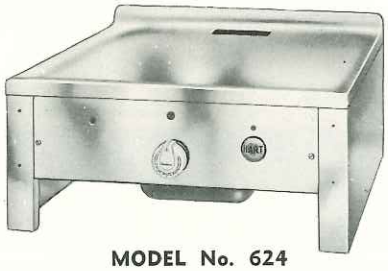

MODEL No. 624
THERMOGRID

The No. 624 Thermogrid is the smaller edition of the No. 636. The No. 624 is 24" wide by 20" deep and has 2 cast iron burners controlled by one thermostat.

The No. 624 Thermogrid may be combined with various other models to fit one of the stainless steel stands. For example a No. 624 may be used with a No. 5120 open burner unit on a No. SS536 stand, or can be combined with a No. 5240 open burner unit on a No. SS548 stand. Cutting board also available.

Illustrated above is the Model 636 "Thermogrid" with 1 open burner unit mounted on a No. SS548 Stand.
The Model 636 can be mounted on stand without open burners or with open burner unit on either left or right side which ever is desired.

HART *Thermogrid*

Thermostatically Controlled Stainless Steel Griddle

SPECIFICATIONS

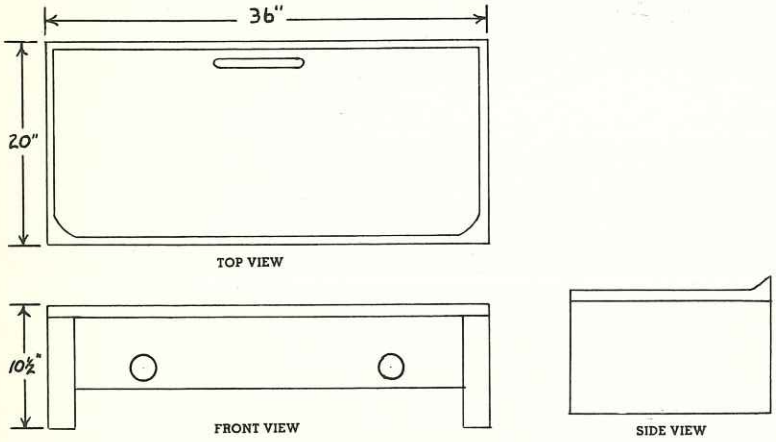

MODEL No. 636

Overall size 36" wide, 20" deep, 10½" high.
2 Robertshaw Thermostats.
4 heavy cast iron trombone type burners.
Stainless Steel construction.
Approved by the American Gas Association.
Shipping Weight 185 lbs.
Burner Rating 12,000 BTU/Hr. Ea.
Total Input 48,000 BTU/Hr.
Gas Connection ¾"

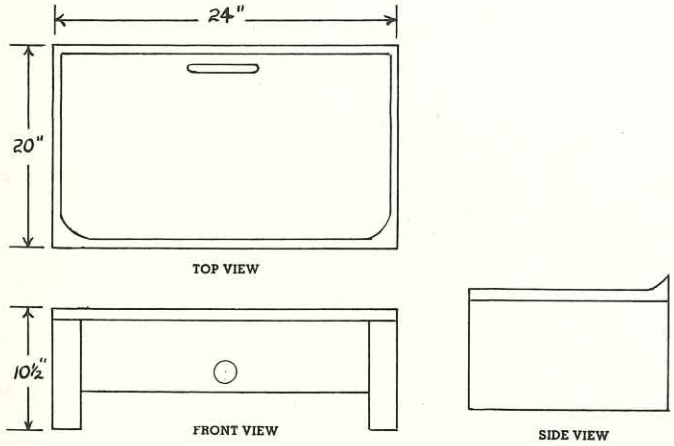

MODEL No. 624

Overall size 24" wide, 20" deep, 10½" high.
1 Robertshaw Thermostat.
2 heavy cast iron trombone type burners.
Stainless Steel construction.
Approved by the American Gas Association.
Shipping Weight 130 lbs.
Burner Rating 12,000 BTU/Hr. Ea.
Total Input 24,000 BTU/Hr.
Gas Connection ¾"

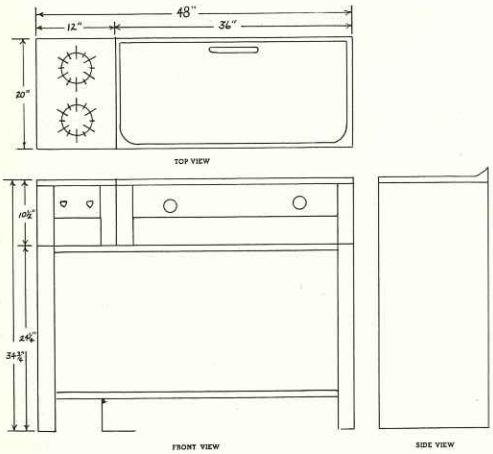

MODEL No. 636 — No. 5120 ON SS548 STAND

Overall Size 48" wide, 20" deep, 34¾" high.
Griddle Size 36" wide, 20" deep, 10½" high.
Burner Unit Size 12" wide, 20" deep, 10½" high.
2 Robertshaw Thermostats.
4 heavy cast iron trombone type burners in griddle.
2 heavy cast iron burners in open burner unit.
Stainless Steel construction.
Approved by the American Gas Association.
Shipping Weight 280 lbs.
Burners 2 Open Top @ 12,000 BTU/Hr. Ea.
4 Griddle @ 12,000 BTU/Hr. Ea.
Total Input 72,000 BTU/Hr.
Gas Connection For No. 5120—⅜
For No. 636—¾"

VULCAN·HART MANUFACTURING CO. 2006 NORTH WESTERN PARKWAY LOUISVILLE 3, KY.

HART

STAINLESS STEEL

GRIDDLES

WITH NEWER, GREATER PROFIT MAKING FEATURES

MODEL No. 524

The New Hart Griddles are the last word in design, styling and construction. They contain all of the great features that have for so long made Hart Griddles famous throughout the commercial cooking field.

Some of the outstanding features of the Hart Griddle are: new improved cast iron griddle plate with built in backsplash; new streamlined construction of easy to clean stainless steel; automatic lighting; all new design burners and 3 sizes of Griddles to fit every need — 24, 30 and 36 inch length.

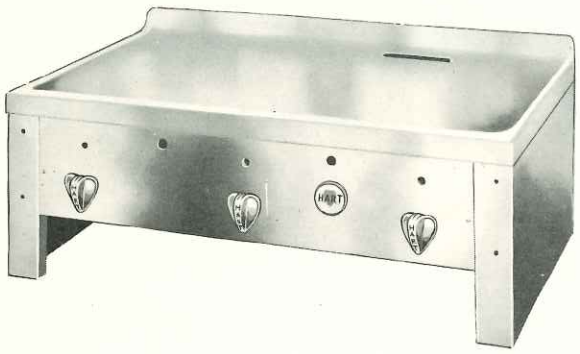

MODEL No. 530

MODEL No. 536

New
Heavy cast iron griddle plate, machine ground and polished, with raised edge. Grease slot at rear empties into large grease catch below griddle.

New
Heavy cast iron burners, efficient in operation and easy to clean. All burners have high rating of 12,000 B.T.U.

New
Streamlined valve handles, chrome plated with markings—high, low, medium.

Many MOUNTED COMBINATIONS

Most any type of combination of griddle and burner units desired can be made with the new Hart Griddle. It can be mounted on a stand in the following combinations . . . . . .

No. 524 (24" GRIDDLE)
On 36" (No. SS536) stand with 1 (No. 5120) burner unit on either right or left side.
On 48" (No. SS548) stand with 1 (No. 5240) burner unit on either right or left side or 1 (No. 5120) burner unit on each side.

No. 536 (36" GRIDDLE)
On 36" (No. SS536) stand by itself.
On 48" (No. SS548) stand with 1 (No. 5120) burner unit on either right or left side.

No. 530 (30" GRIDDLE)
Comes without stand.

No. 536 Griddle with No. 5120 Open Burner on No. SS548 Stand.

HART Griddles

STREAMLINED DESIGN
STURDY CONSTRUCTION
STAINLESS STEEL FINISH

MODEL No. 524

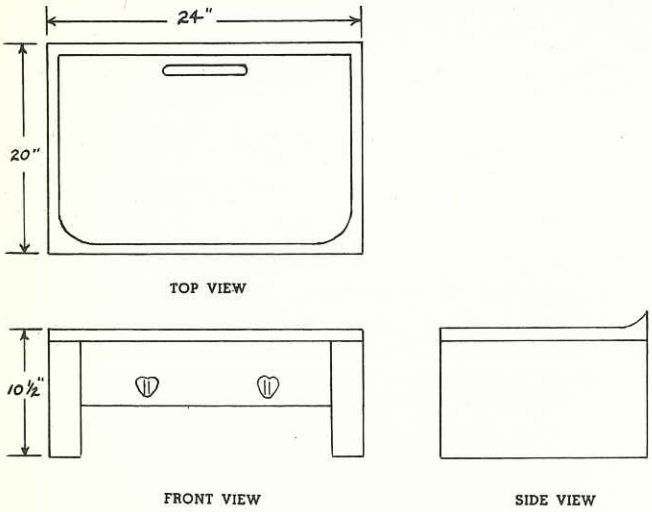

Overall Size, 24" wide, 20" deep, 10½" high.
Griddle Plate Size, 24" wide, 20" deep.
2 Burners
B.T.U.s each Burner 12,000.
Stainless Steel Construction.
Cutting board available.
Shipping Weight 120 lbs **¾ Gas Connection**

MODEL No. 530

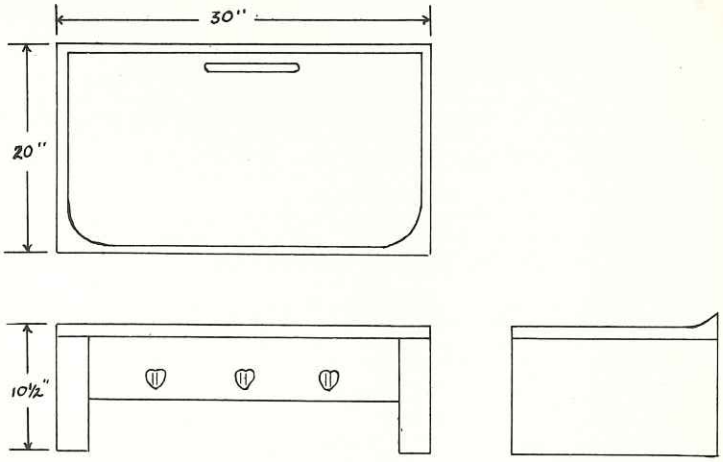

Overall Size, 30" wide, 20" deep, 10½" high.
Griddle Plate Size, 30" wide, 20" deep.
3 Burners
B.T.U.s each Burner 12,000.
Stainless Steel Construction.
Cutting board available.
Shipping Weight 155 lbs. **¾" Gas Connection**

MODEL No. 536

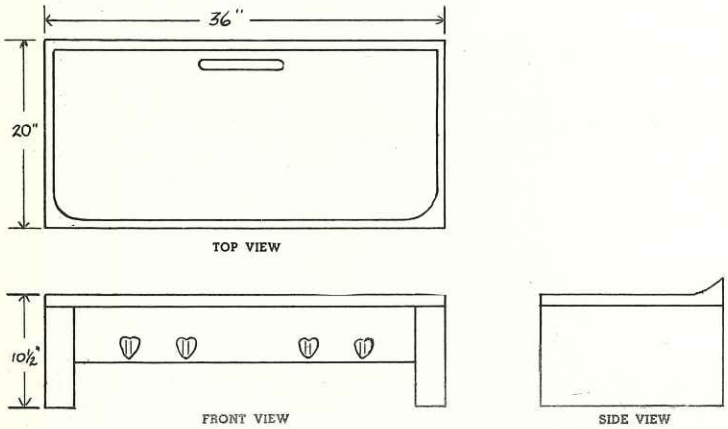

Overall Size, 36" wide, 20" deep, 10½" high.
Griddle Plate Size, 36" wide, 20" deep.
4 Burners
B.T.U.s each Burner 12,000.
Stainless Steel Construction.
Cutting board available.
Shipping Weight 175 lbs. **¾" Gas Connection**

MODEL No. 536 ON STAND

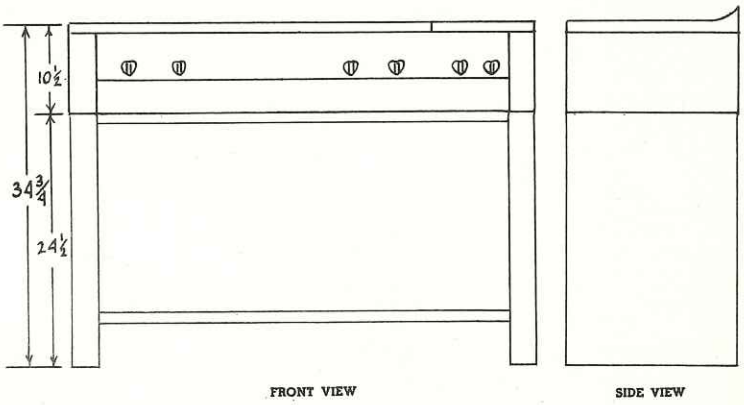

Overall Size, 48" wide, 20" deep, 34¾" high.
Griddle Size, 36" wide, 20" deep, 10½" high.
Burner Unit Size, 12" wide, 20" deep, 10½" high.
4 burners in griddle, B.T.U.s 12,000.
2 burners in open burner unit, B.T.U.s 12,000.
Stainless Steel Construction.
Shipping Weight 285 lbs.

VULCAN·HART MANUFACTURING CO. 2006 NORTH WESTERN PARKWAY **LOUISVILLE 3, KY.**

HART COMBINATION GRIDDLES AND OPEN BURNERS

in Beautiful Gleaming Stainless Steel

Custom built with sizes and arrangements to fit every need, the new Hart Combination Griddle and burners are the ultimate in performance, convenience and quality. They are of the same high quality that has always been found in Hart products.

Constructed of beautiful stainless steel the new Hart Combination Griddle and Burners offer greater cooking flexibility, more dollar for dollar value than ever before.

In one compact "eye appealing" unit the new Hart Combination Griddle and Burners have many new features that will make better customers and build bigger profits.

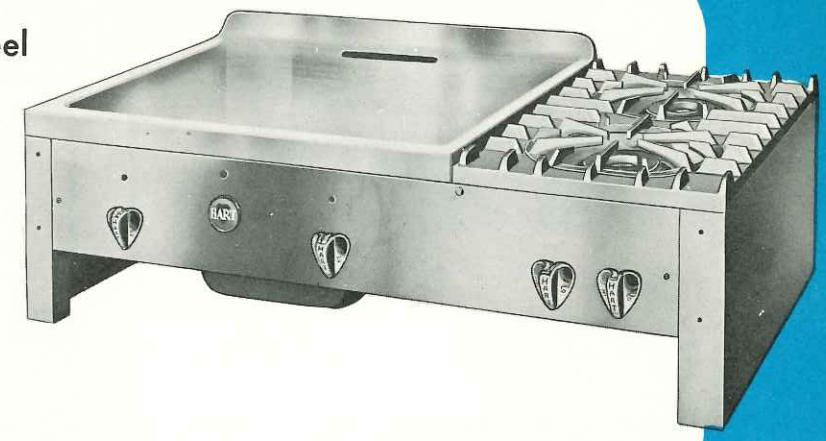

Check

THESE FEATURES . . .

Constant pilot lighters

Heavy cast iron griddle plate

Streamlined stainless steel body

High, low, medium valves

Chrome plated valve handles

Easy to clean burner sections

Drip pan removes easily

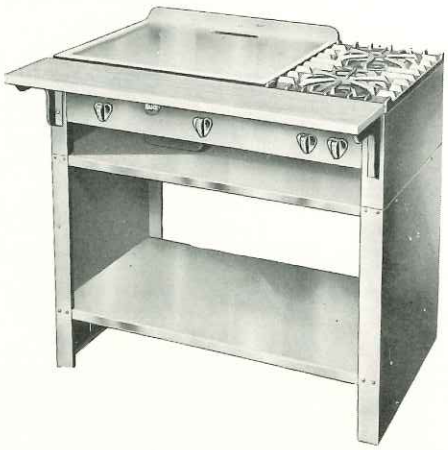

All Hart Combination Griddle and Burners are available with stainless steel stands if desired. Cutting board is available on either counter or stand models.

MODEL No. 536-2
36" Griddle — 2 open burners

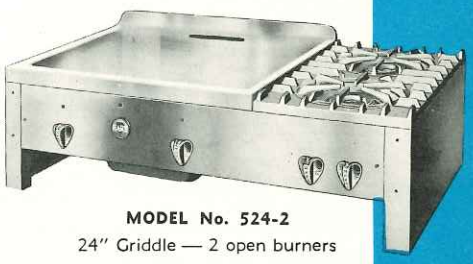

MODEL No. 524-2
24" Griddle — 2 open burners

MODEL No. 518-2
18" Griddle — 2 open burners

HART

COMBINATION GRIDDLES AND OPEN BURNERS

For Greater Value

SPECIFICATIONS

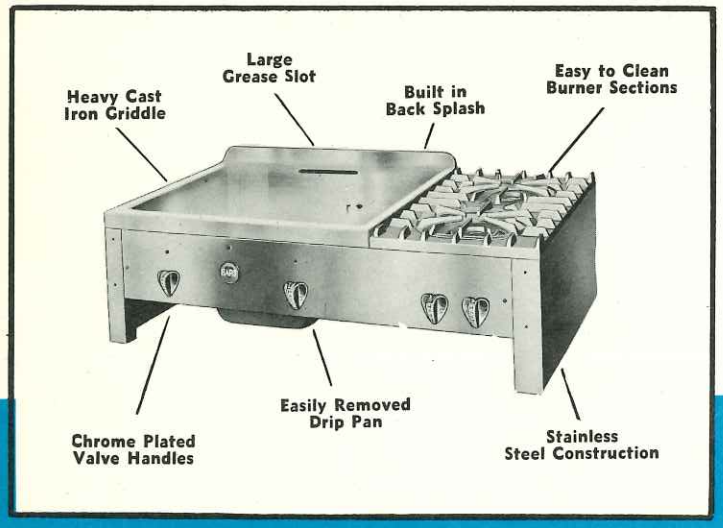

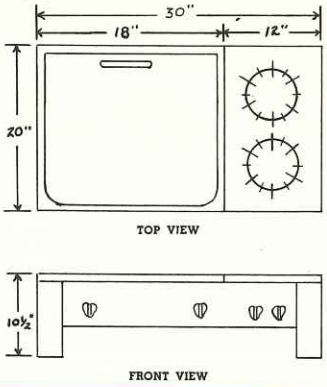

¾" Gas Connection
2 Open Burners @ 12,000
2 Griddle Burners @ 12,000
Total 48,000

MODEL No. 518-2
Overall Size, 30" wide, 20" deep, 10½" high.
Griddle Size, 18" wide, 20" deep.
2 Open Burners, Weight 150 lbs.

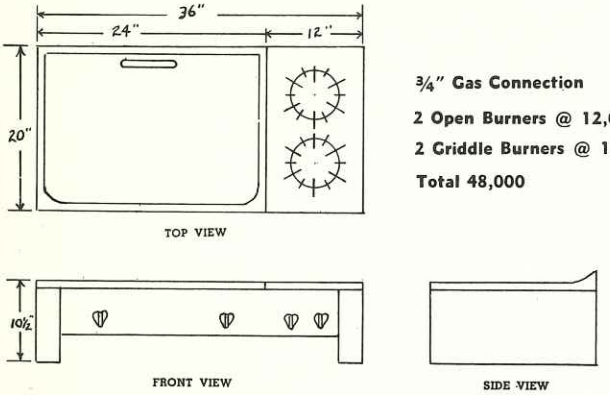

¾" Gas Connection
2 Open Burners @ 12,000
2 Griddle Burners @ 12,000
Total 48,000

MODEL No. 524-2
Overall Size; 36" wide, 20" deep, 10½" high.
Griddle Size, 24" wide, 20" deep.
2 Open Burners, Weight 165 lbs.

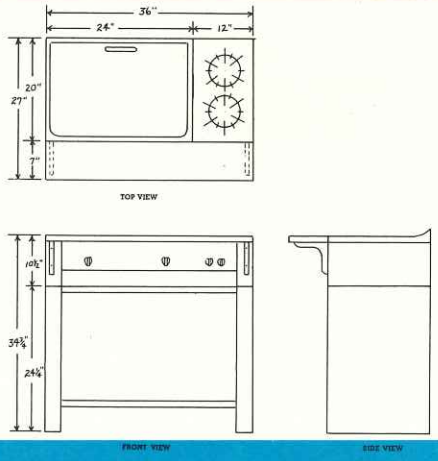

MODEL No. 524-2 ON STAND
Overall Size, 36" wide, 20" deep, 34¾" high
Griddle Size, 24" wide, 20" deep.
2 Open Burners, Weight 205 lbs.

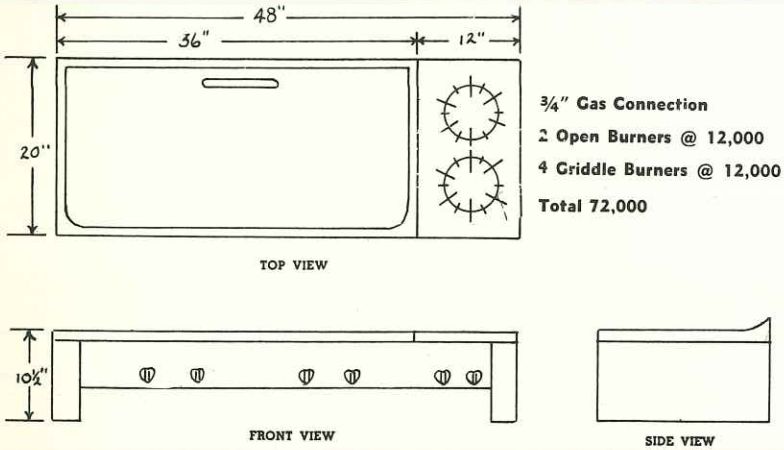

¾" Gas Connection
2 Open Burners @ 12,000
4 Griddle Burners @ 12,000
Total 72,000

MODEL No. 536-2
Overall Size, 48" wide, 20" deep, 10½" high.
Griddle Size, 36" wide, 20" deep.
2 Open Burners, Weight 215 lbs.

Quality, Beauty, Efficiency and Economy Are Built into the Hart Line

STYLED AND ENGINEERED FOR COOKING FLEXIBILITY AND DOLLAR FOR DOLLAR VALUE.

VULCAN·HART MANUFACTURING CO. 2006 NORTH WESTERN PARKWAY LOUISVILLE 3, KY.

HART

STAINLESS STEEL

OPEN BURNER UNITS

The new Hart Open Burners are truly the most outstanding burner that is available today. Sturdily constructed of stainless steel, it has many new features that assure you of top performance, quality and convenience.

Available in two sizes (2 burner and 4 burner) they are equipped with automatic lighters; new 3 piece top grates; chrome plated valve handles and many fine new improvements.

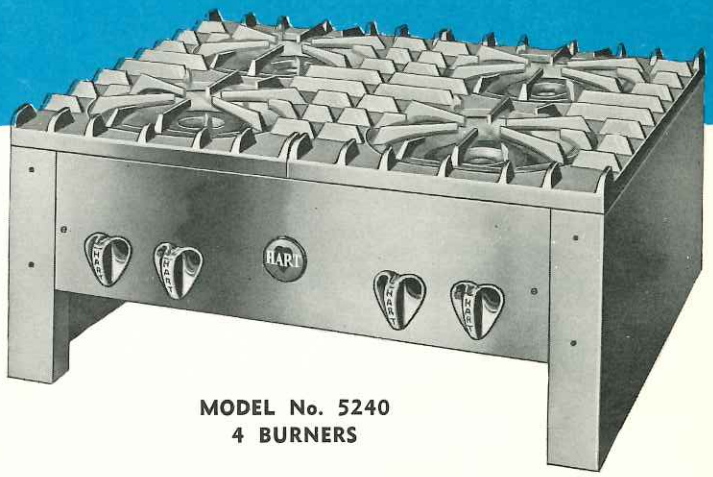

MODEL No. 5240
4 BURNERS

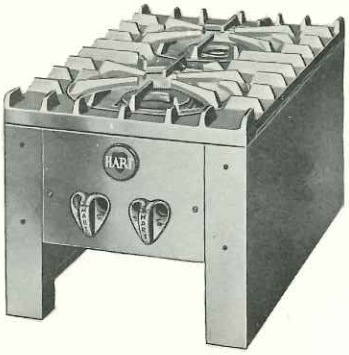

MODEL No. 5120
2 BURNER

- **Modern Design**
- **Stainless steel construction**
- **Automatic Lighters**
- **Chrome plated valve handles**
- **Two sizes . . . 2 burner and 4 burner**
- **Easy to Clean**

Like all Hart Counter Appliances the No. 5120 and 5240 Open Burners have fronts that are drilled for use of cutting board in combination with other units. The heavy burners in the Hart Open Burners have a rating of 12,000 B.T.U.

Either of the Hart Open Burners can be used in conjunction with other equipment on either size stainless steel stand or they can be placed to the right or left of any Hart counter equipment and have that "made to order" appearance.

MODEL No. 5240 OPEN BURNER
on No. SS548 Stand with No. 524 Griddle

MODEL No. 5120 OPEN BURNER
on No. SS548 Stand with No. 636 Thermogrid

HART

Open Burner Units

DESIGNED FOR RESTAURANT USE

SPECIFICATIONS

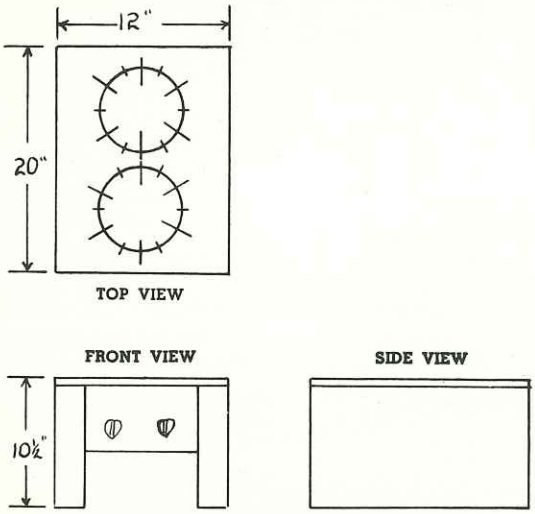

MODEL No. 5120

Overall Size 12" wide 20" deep 10½" high
2 Open Burners—12,000 BTU/Hrs. Ea.—24,000 BTU Total
Weight 50 lbs.—⅜" Gas Connection

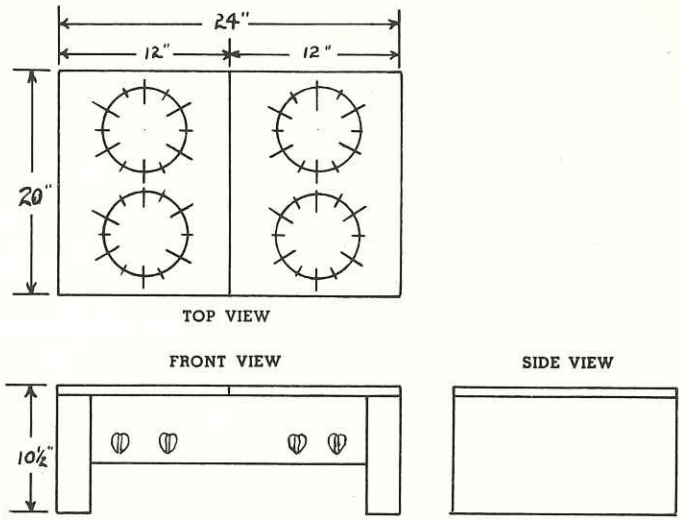

MODEL No. 5240

Overall Size 24" wide 20" deep 10½" high
4 Open Burners—12,000 BTU/Hrs. Ea.—Total 48,000 BTU Hrs.
Weight 105 lbs.— ¾" Gas Connection

- **Chrome plated valve handles**
- **Two sizes . . . 2 burner and 4 burner**
- **Easy to Clean**

- **Modern Design**
- **Stainless steel construction**
- **Automatic Lighters**

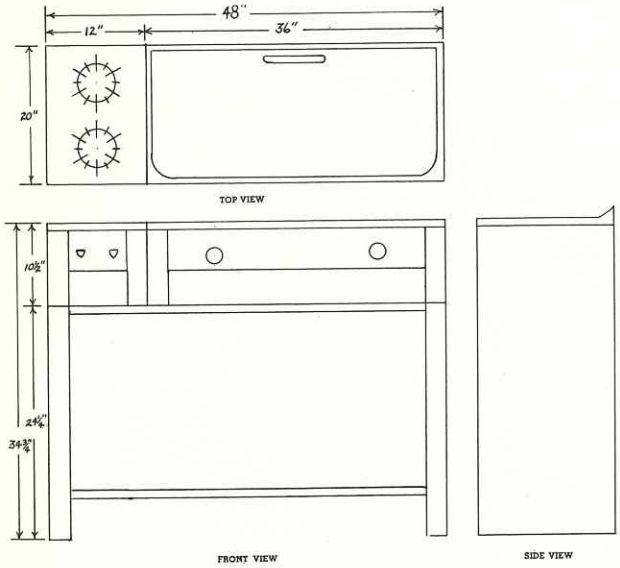

MODEL No. 5120

On SS 548 Stand with 636 Thermogrid

Overall Size	48" wide	20" deep	34¾" high
Griddle Size	36" wide	20" deep	
Burner Unit Size	12" wide	20" deep	10½" high

Weight 280 lbs.

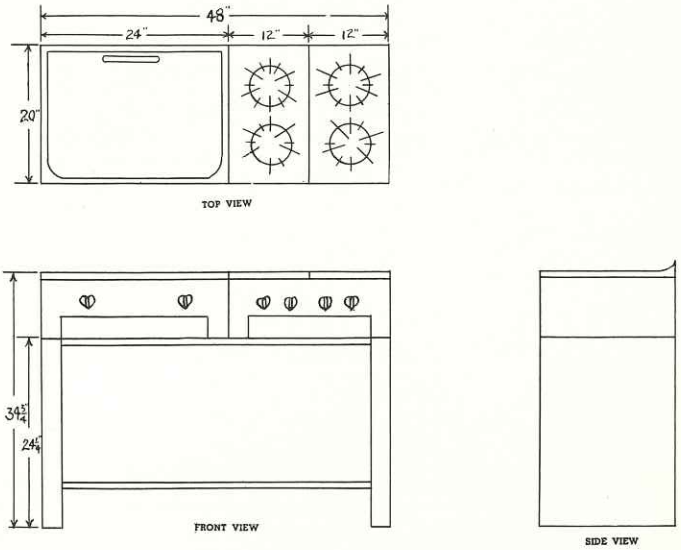

MODEL No. 5240

On No. SS548 Stand with 524 Griddle

Overall Size	48" wide	20" deep	34¾"
Griddle Size	24" wide	20" deep	
Burner Unit Size	24" wide	20" deep	10½" high

Weight 270 lbs.

VULCAN·HART MANUFACTURING CO. 2006 NORTH WESTERN PARKWAY **LOUISVILLE 3, KY.**

HART

STAINLESS STEEL FOOD WARMERS

The new Hart Food Warmers are of the finest quality construction. Made of stainless steel · · · · and approved by the American Gas Association. The temperature of each 12″ section is individually controlled with a High, Medium, Low valve. Top sections are interchangeable.

MODEL Nos.
481S complete less back
481SB complete with back

The Models No. 381S, 381SB and No. 481S, 481SB come complete with stainless steel stand, inserts and pans. Each model has full length cutting board. The new Hart Food Warmer is also available without stand for use on back bar, front counter or to be built into other equipment. No water reservoir to fill, drain or leak. No waiting for water to heat. The new Hart Food Warmer is quick to heat up, economical to operate. They are built and guaranteed to give lasting satisfaction for many years.

Features

Scientifically designed burner — High, Medium, Low valves. Individually controlled burner for each section. Instant action pilot light. Unit divided into 12″ sections. Each section may be kept at a different temperature. Even heat distribution throughout.

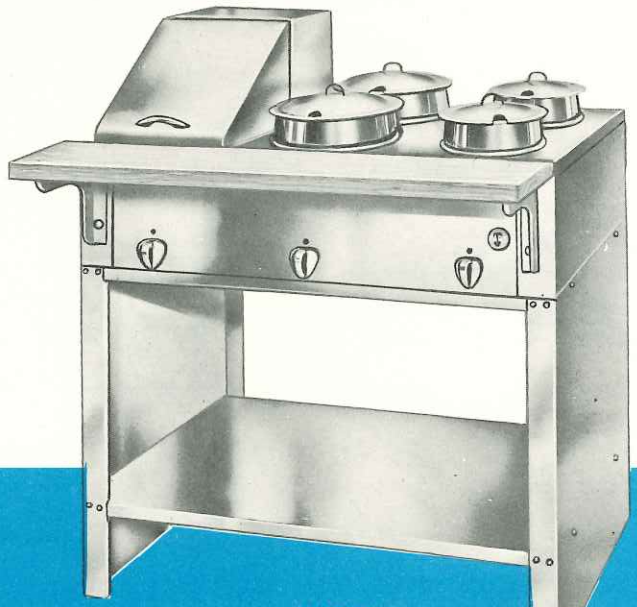

MODEL Nos.
361S complete less back
361SB complete with back

A PANEL
For No. 165 Meat Pan

B PANEL
For 2-8½″ Insets

C PANEL
For 2-6½″ Insets

INTERCHANGEABLE TOP PANELS
Panels merely snap in or out and may be changed to make any arrangement which might be desired.

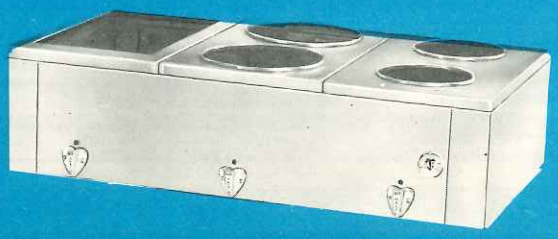

MODEL No. 360
Less stand, inserts and cutting board

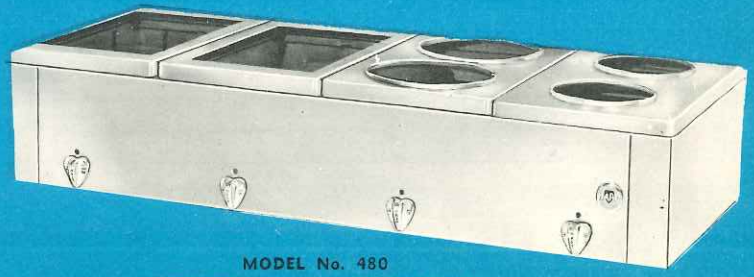

MODEL No. 480
Less stand, inserts and cutting board

HART FOOD WARMERS

NEW AND IMPROVED

SPECIFICATIONS

Model No. 481S

FRONT VIEW

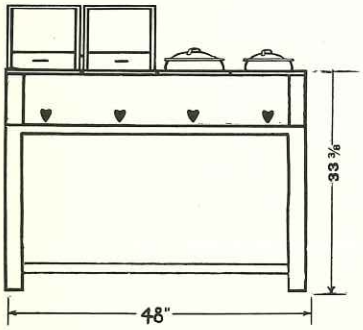

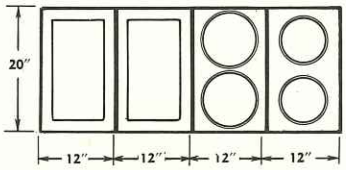

TOP VIEW

DESCRIPTION	WIDTH	DEPTH	HEIGHT	MISCELLANEOUS
Overall Dimension	48"	20"	41 3/8"	With Warming Cover
Insets, (2) each	8 1/2" Dia.	8 1/4"	—	Stainless Steel
Insets, (2) each	6 1/2" Dia.	8 1/4"	—	Stainless Steel
Meat Pans, No. 165 (2) each	10"	16"	2 1/2"	Stainless Steel
Warming Cover	10 3/4"	18 1/4"	8"	Stainless Steel
Top Plates	12"	20"	—	Stainless Steel
Cutting Board	48"	7"	1"	Laminated
Shipping Weight	—	—	—	220 Lbs.
Manifold Diameter	—	—	—	3/8 inch

Model No. 361S

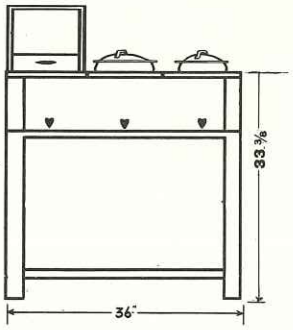

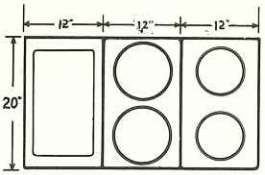

TOP VIEW

DESCRIPTION	WIDTH	DEPTH	HEIGHT	MISCELLANEOUS
Overall Dimension	36"	20"	41 3/8"	With Warming Cover
Insets, (2) each	8 1/2" Dia.	8 1/4"	—	Stainless Steel
Insets, (2) each	6 1/2" Dia.	8 1/4"	—	Stainless Steel
Meat Pan, No. 165	10"	16"	2 1/2"	Stainless Steel
Warming Cover	10 3/4"	18 1/4"	8"	Stainless Steel
Top Plates	12"	20"	—	Stainless Steel
Cutting Board	36"	7"	1"	Laminated
Shipping Weight	—	—	—	180 Lbs.
Manifold Diameter	—	—	—	3/8 inch

Model No. 480

FRONT VIEW

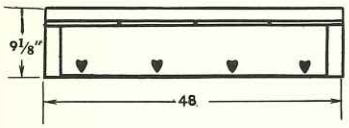

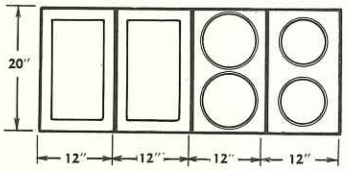

TOP VIEW

DESCRIPTION	WIDTH	DEPTH	HEIGHT	MISCELLANEOUS
Top Plates (4) each	12"	20"	—	Stainless Steel
Burner Rating (4) each	—	—	—	1,200 B.T.U.
Shipping Weight	—	—	—	85 Lbs.
Stainless Steel	—	—	—	Polished Finish
Overall Dimension	48"	20"	9 1/8"	
Manifold Diameter	—	—	—	3/8 inch

Model No. 360

FRONT VIEW

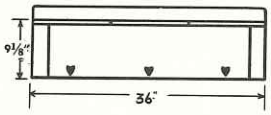

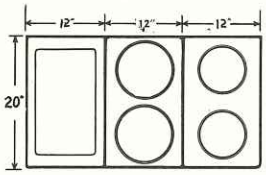

TOP VIEW

DESCRIPTION	WIDTH	DEPTH	HEIGHT	MISCELLANEOUS
Top Plates (3) each	12"	20"	—	Stainless Steel
Burner Rating (3) each		—	—	1,200 B.T.U.
Shipping Weight	—	—	—	70 Lbs.
Stainless Steel	—	—	—	Polished Finish
Overall Dimension	36"	20"	9 1/8"	—
Manifold Diameter	—	—	—	3/8 inch

VULCAN·HART MANUFACTURING CO. 2006 NORTH WESTERN PARKWAY LOUISVILLE 3, KY.

COMPLETELY NEW - COMPLETELY AUTOMATIC

VULCAN·HART

GAS COUNTER FRYER

New "Lift-Out" fry kettle of enduring STAINLESS STEEL

Also Available With Nickel Plate Steel Fry Kettle At Lower Price

Here is the fryer that was designed for speed, performance and dependability. The new VULCAN HART Gas Counter Fryer will fry 18 pounds of raw potatoes to french fries in one hour. New "Lift-Out" fry kettle is of one piece construction and is easily removed and cleaned—no hard to get to crevices or corners. Special burner design assures uniform heat distribution (operates at 30,000 B.T.U. per hour). Thermostatic control keeps fat at constant desired temperature. Capillary tube supported by heavy stainless rod which also serves to support thermostat bulb—lifts up and locks into position for removal of fry kettle. Stainless steel body designed to match HART 500 and 600 series griddles, food warmers and hot plates.

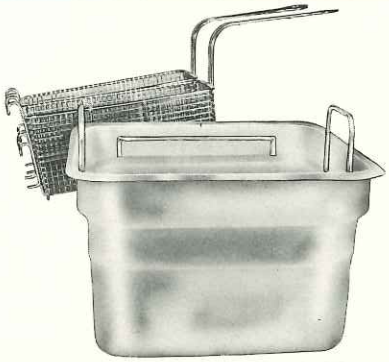

REMOVABLE FRY KETTLE

Easily removed; one piece deep drawn construction of lifetime STAINLESS STEEL. (Guaranteed for five years). Nickel plated fry baskets.

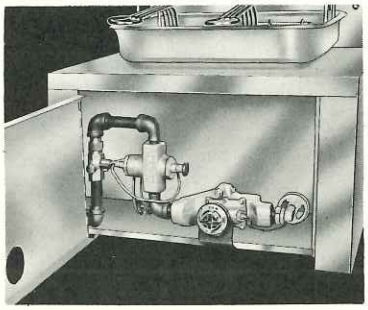

EASY TO SERVICE

Accessibility to all control parts is one of the outstanding features of the VULCAN HART Gas Counter Fryer. Heavy duty "snap acting" thermostat and gas safety shut-off are protected from heat by insulated baffle assembly.

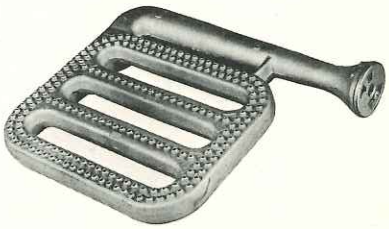

SPECIAL BURNER

Newly designed burner is one piece cast iron construction—has greater combustion and assures even heat distribution. Easily removed; burner rating 30,000 B.T.U. per hour.

VULCAN·HART MANUFACTURING CO. 2006 NORTH WESTERN PARKWAY LOUISVILLE 3, KY.

VULCAN-HART GAS COUNTER FRYER

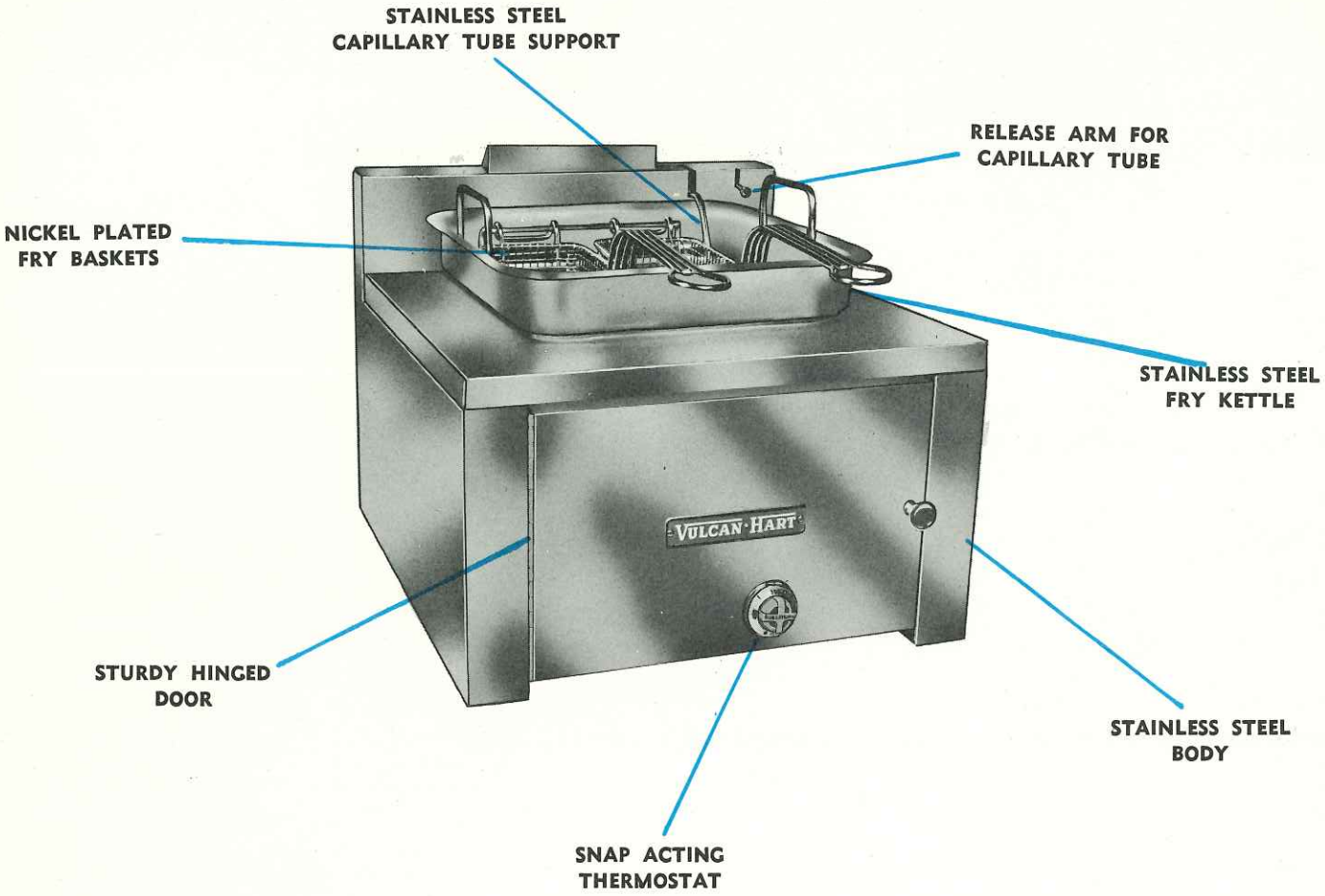

SPECIFICATIONS

KETTLE
Of STAINLESS STEEL, one piece drawn construction. Rims and corners rounded for ease of cleaning.

BODY
All STAINLESS STEEL construction with heavy insulation. Designed to battery in with other HART counter appliances.

BURNER
One piece cast iron construction-designed for greater combustion. Burner easily removed. Rating 30,000 B.T.U. per hour.

THERMOSTAT
Heavy duty ROBERTSHAW snap acting type. Maintains proper temperature at all times.

FRY BASKETS
Each fryer comes with twin nickel plated fry baskets. Single size also available.

PILOT LIGHT
New ROBERTSHAW target type—self aerating. Very stable and completely trouble free.

DIMENSIONS

	Overall size width	depth	height	No. of burners	Gas inlet	Fat Cap.	Shipping weight
All Models	18"	20"	14⅜"	1	⅜"	15 lbs.	75 lbs.

MODEL NO.

GF18PTS — Natural Gas with Plated Tank — Safety Pilot
GF18S —Natural Gas with Stainless Steel Tank — Safety Pilot
GF18PTFS — Manufactured gas with Plated Tank — Safety Pilot
GF18FS — Manufactured gas with Stainless Steel Tank — Safety Pilot
GFPTLPS — Bottled Gas with Plated Tank — Safety Pilot
GFLPS — Bottled Gas with Stainless Steel — Safety Pilot

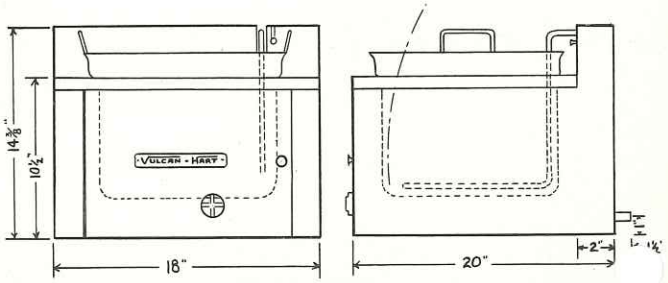

THIS FRYER IS APPROVED BY THE AMERICAN GAS ASSOCIATION

"THRIFTY"

GRIDDLE SERIES

overall dimensions

width	depth	height	griddle size	shipping weight	
18"	22"	9"	18 x 18	65 lbs.	thrifty no. 1
24"	22"	9"	24 x 18	75 lbs.	thrifty no. 2
30"	22"	9"	30 x 18	100 lbs.	thrifty no. 3
30"	22"	9"	18 x 18	90 lbs.	thrifty no. 4
36"	22"	9"	24 x 18	100 lbs.	thrifty no. 5
42"	22"	9"	30 x 18	120 lbs.	thrifty no. 6

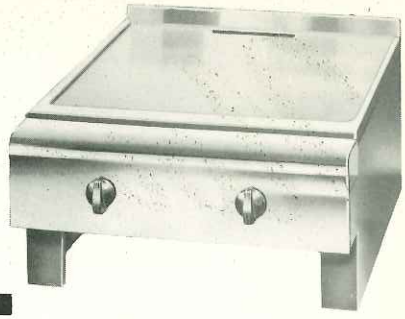

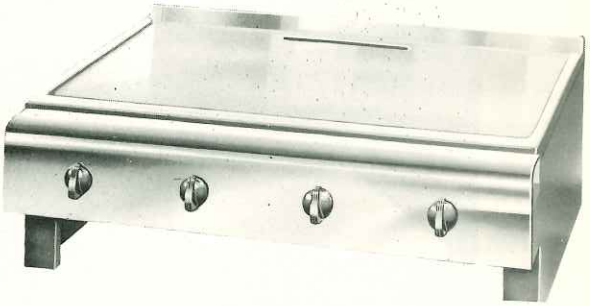

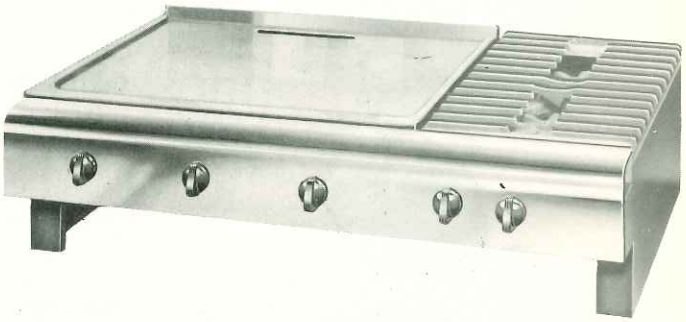

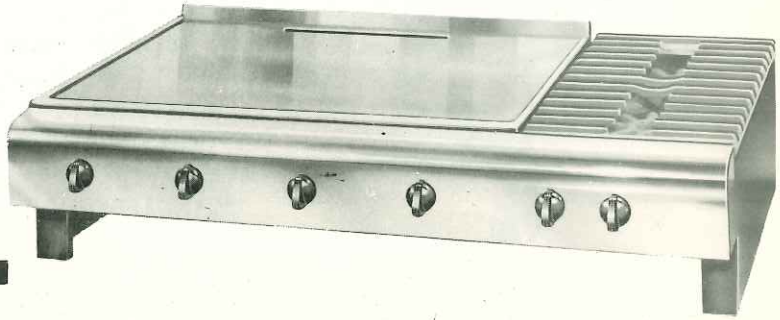

VULCAN HART MFG. CO., LOUISVILLE 3, KY.

Now THRIFTY GRIDDLES OFFER GREATER FEATURES THAN EVER BEFORE

DIMENSIONS

		High	Deep	Wt.
No. 40	30" Wide	26¼"	18"	40 lbs.
No. 50	36" Wide	26¼"	18"	45 lbs.
No. 60	42" Wide	26¼"	18"	50 lbs.

No. 50 Stand
with
No. 5 Thrifty Mounted

No. 50 Stand Only

(Ends of Stand 18 Ga. — Shelf and Top 18 Ga. Shipped Knocked Down In Cartons. Easily Assembled.)

GRIDDLE: Heavy cast iron, machine ground and polished with raised edge to prevent excessive splashing of grease. Grease slot at rear empties into large grease catch below.

BURNERS: HART designed of enduring cast iron, non-clogging, efficient in operation and easy to clean.

GRATES: One piece heavy cast iron grates, designed especially for restaurant use.

BODY: Made of heavy gauge steel, well constructed and braced throughout. Beautiful, gleaming, chrome plated manifold cover is easy to keep clean.

GAS VALVES: Made of cast brass and approved by American Gas Association.

HANDLES: Non-breakable black enameled steel.

VULCAN-HART MANUFACTURING CO. 2006 NORTH WESTERN PARKWAY LOUISVILLE 3, KY.

"THRIFTY"

Broiler Griddles

STYLED AND ENGINEERED FOR COOKING FLEXIBILITY AND DOLLAR FOR DOLLAR VALUE.

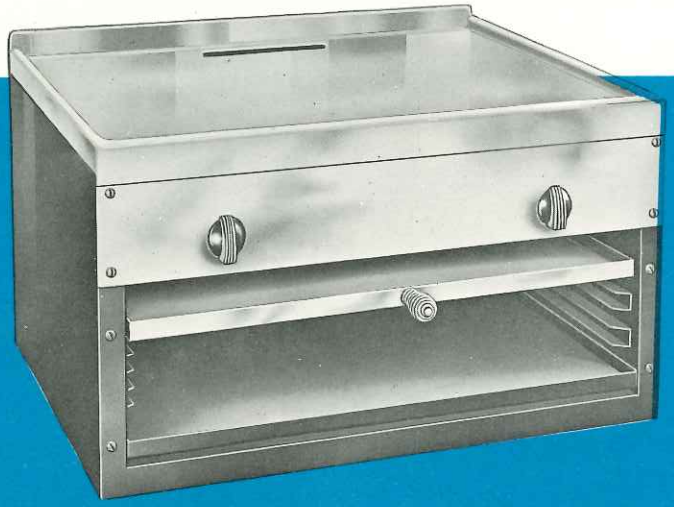

It's a Broiler . . . it's a Griddle . . . it's BOTH broiler and griddle at the same time. The new "Thrifty" Broiler Griddle is just about the most versatile unit of equipment that you can own. Ruggedly constructed in one compact unit it does two job once — broiling and grilling . . . and its price is within the means of every restaurant owner.

Some of the features of the "Thrifty" Broiler Griddle are . . . heavy cast iron griddle plate; large size broiler; sturdy broiler pan especially designed to drain excess grease to rear and into large drawer type grease catch.

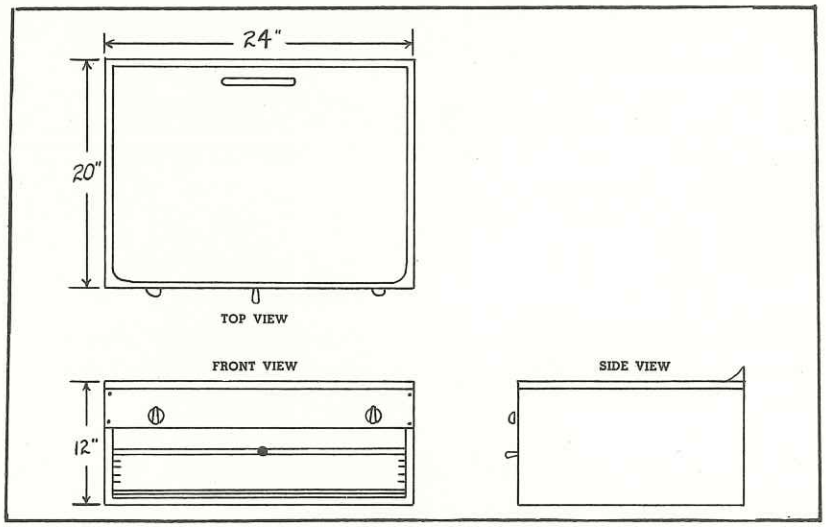

MODEL No. 24BG
Height 12"
Width 24"
Depth 20"
Broiler Size 21⅝" x 16⅝"
Shipping Weight 130 lbs.
Available for any type gas — natural, manufactured, mixed and L. P.

Check THESE FEATURES . . .

- √ **Heavy Cast Iron Griddle Plate**
- √ **Large Size Broiler**
- √ **Sturdy Broiler Pan**
- √ **Large Drawer Type Grease Catch**
- √ **Greater Cooking Flexibility**
- √ **Modern Design**
- √ **Economical Operation**

It Pays to Cook With "THRIFTY"

VULCAN·HART MANUFACTURING CO. 2006 NORTH WESTERN PARKWAY **LOUISVILLE 3, KY.**

No. 5 U. S. Army Range

A heavy duty cooking range built to U. S. Government specifications, which will give efficient service and lasting satisfaction.

This range is highly recommended for restaurants, road side inns, schools, churches and other places where a heavy, durable, highly efficient range is required. The oven is an exceptional baker, and the top is designed for cooking large quantities of food quickly.

BODY. Range body of 14 gauge steel, tightly riveted with heavy rivets, closely spaced. The end opposite the firebox is insulated.

OVEN. Width 28-¼", height 14", depth 22-½". Made of 12 gauge steel, tightly riveted. Fitted with one heavy rack.

WARMING COMPARTMENT. Located just beneath oven. Suitable for keeping food warm before serving.

FIREBOX. Size 17" long, 9" wide, 8-½" deep. Linings which are extra heavy, consist of front lining, right and left side linings (interchangeable) and back lining.

Back lining may consist of solid "U" shaped lining or "U" water box. This equipment is optional. Specify which type is desired when ordering.

Heavy dump grate with detachable shank is provided for soft coal or wood.

"U" WATERBOX. Weighs 83 pounds, and will heat from 50 to 75 gallons of water, depending on usage. Connect to boiler with capacity not less than 40 gallons.

TOP. Fitted with four two-hole key plates and eight 9" covers. The key plates are made of high quality grey iron, especially designed to prevent warping. Plain black finish.

MALLEABLE FITTINGS. Door handles, oven door supports, ash pan front and handle, and similar fittings are made of malleable iron for maximum durability, at points where greatest wear is likely to occur.

HIGH SHELF. High shelf is made of durable sheet metal, heavily reinforced with steel bands, and supplied with malleable reinforced brackets. First joint of pipe with damper is standard equipment.

FINISH. Range body, high shelf and first joint of pipe finished in high quality black stove enamel.

Firebox may be supplied on either right or left side. Specify when ordering. Right hand firebox will be shipped, as illustrated, unless otherwise indicated.

ADDITIONAL SPECIFICATIONS: Floor space and cooking surface - 51-½" x 33-½". Approximate shipping weight - 950 pounds. Size of smokepipe - 8". Distance from floor to cooking top - 33-½". Height to top of high shelf - 57".

No. 5 ARMY COAL BURNING RANGE with "U" Water Box
No. 5 ARMY COAL BURNING RANGE with Solid linings
No. 5 ARMY COAL BURNING RANGE with 2 flat water boxes

Oil fired. Highly efficient and economical gravity feed oil burner can be supplied, especially designed for this range. Write for full details.

VULCAN·HART MANUFACTURING CO. 2006 NORTH WESTERN PARKWAY LOUISVILLE 3, KY.

VULCAN·HART No. 3418

VH-136

GAS-FIRED GRIDDLE

No. 3418

SPECIFICATIONS

GENERAL

The HART No. 3418 is manufactured to comply with Military Specification MIL-G-02239A (QMC) in every respect, without exception.

SPECIFIC

3.3.1 GRIDDLE TOP

Steel plate used shall be prime commercial quality and shall have the following dimensions: 34" long by 18" wide by 7/16" thick, polished to a No. 4 commercial finish. Front and side shall have an integral raised edge to retain grease; rear of the griddle top shall have an integral lip, designed to adequately drain all grease into a receptacle.

3.3.3 GAS BURNERS AND MANIFOLD

Shall have two cast iron burners with universal ports, each with an input of 24,000 B.T.U. per hour which is ample to give 75 B.T.U. per hour per square inch of griddle area. The gas manifold shall be commercial prime quality and constructed so that the gas supply connection can be made at either end.

3.3.4 GAS COCKS

AGA approved universal gas cocks for use with all gases. Gas cock handles to be marked OFF, LO, HI, to agree with settings in gas cock. Two approved pilot lighters shall be furnished.

3.3.2-3.3.5-3.3.6 GREASE RECEPTACLE, BODY FRAME AND SUPPORTING LEGS

Shall all be constructed of corrosion resisting stainless steel, polished to a No. 4 commercial finish, having a minimum thickness of 0.050, plus or minus 0.006 inch. Grease receptacle shall be easily removable and replaceable with a 3" back splasher and to have a minimum capacity of 2 pounds of grease. The legs shall be 2¾" high, free from sharp edges and burrs, and designed for easy cleaning. The frame and legs shall be such that the overall height of the griddle shall be 10¼".

5. PREPARATION FOR DELIVERY:

To be preserved and packed in accordance with military specifications or standard commercial packing, as required.

VULCAN-HART No. 3418

GAS-FIRED GRIDDLE

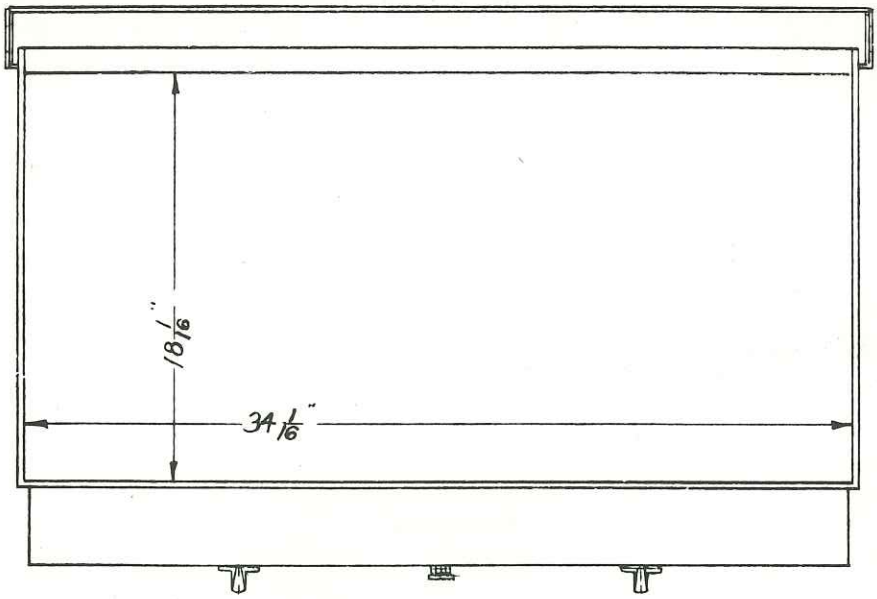

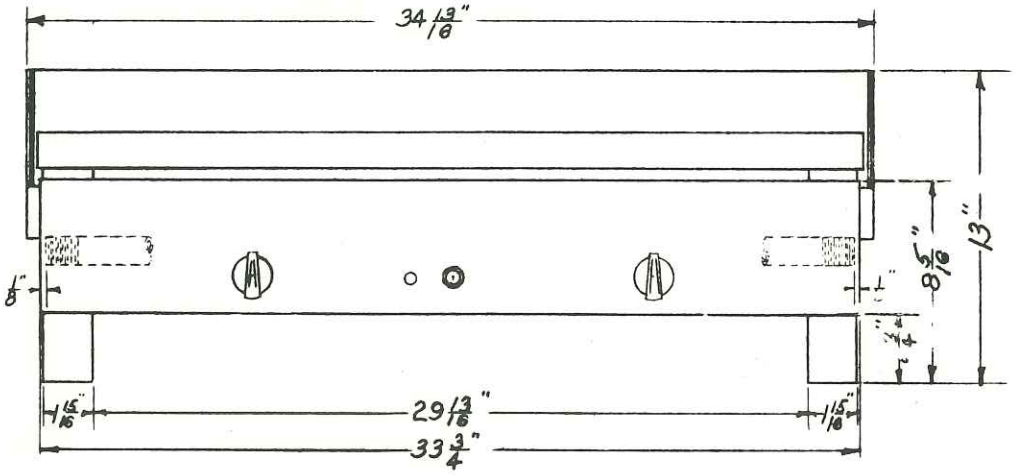

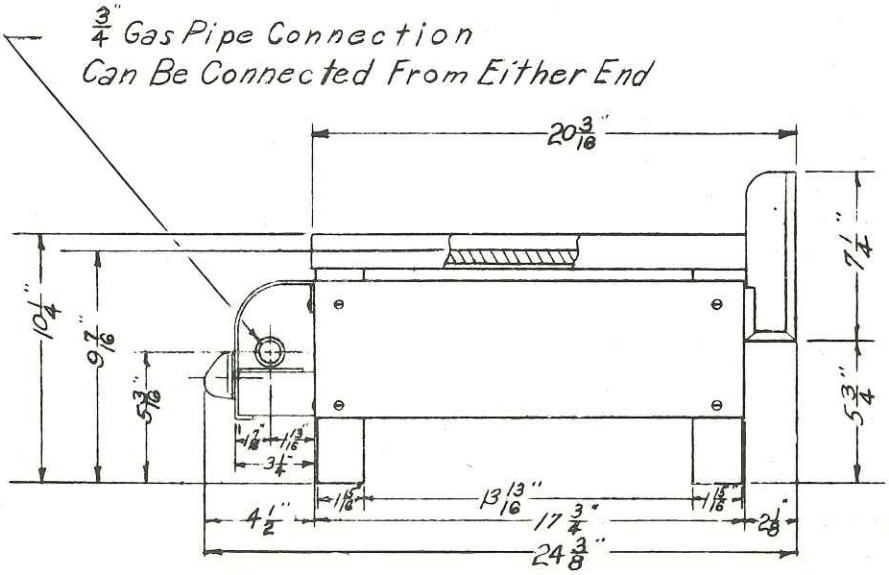

VULCAN-HART MANUFACTURING CO.

2006 NORTH WESTERN PARKWAY — LOUISVILLE 1, KENTUCKY

HART

OIL BURNING HEAVY DUTY RANGE

No. 25

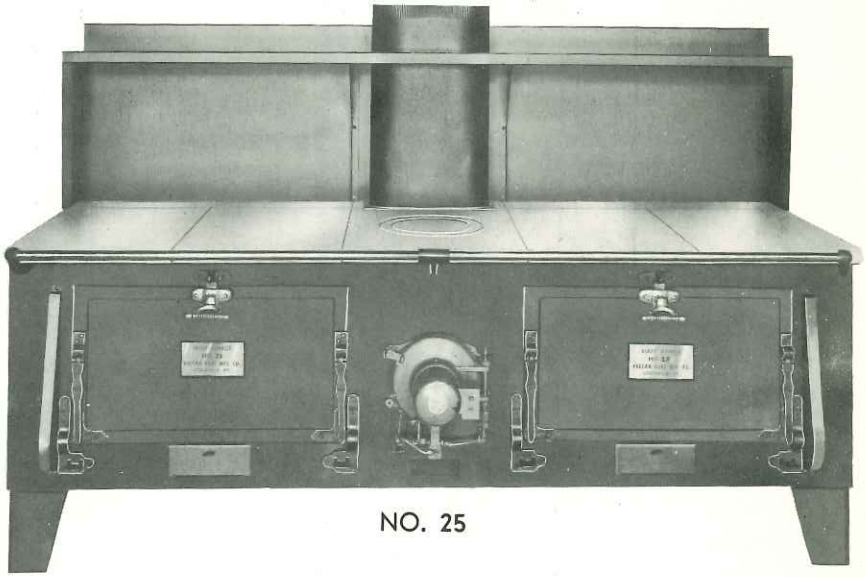

NO. 25

A heavy duty cooking range, built to U. S. Government specifications, which will give efficient service and lasting satisfaction.

This range is highly recommended for restaurants, road side inns, schools, churches, and other places where a heavy, durable, highly efficient range is required. The oven is an exceptional baker and the top is designed for cooking large quantities of food.

BODY: Range body of 14 gauge steel, tightly riveted, with heavy rivets, closely spaced. Mounted on removable legs of 10 gauge formed steel. Will support fully loaded stove without distortion. Hole in leg for bolting down. Range body is insulated, front, back, sides and bottom. All interior parts where flame might touch are protected with cast iron or refractories.

OVEN: Oven sides, top, and bottom constructed of 12 gauge sheet steel. Back of oven 14 gauge steel. One heavy oven rack furnished.

OVEN DOORS: Constructed of sheet steel 16 gauge lining on heavy steel angle frame with 14 gauge exterior. Doors open downward, are spring counterbalanced, shelf type, and properly insulated. The doors are mounted on substantial bearing to support heavy load. Doors are fitted flush against the body of the range.

FIREBOX: Adequate size to give proper combustion. Lined with refractory material. Available with firebox on right or left side in single oven model.

TOPS: Top has two sections over ovens, with a separate section over firebox containing a lid and lid ring. The above plates are made of heavy cast iron, 1/2" thick exclusive of 1/2" ribs, adequately supported. The sides of the top are square and flush with the sides of the body panels for use in battery, if desired. A Guard rail across the front of the range is provided.

HIGH SHELF: 16 gauge steel, painted black, same as body of range. Shelf, itself, is 14" wide, rigidly braced and secured to range. Height from stove top to top of shelf 21-1/4".

OIL BURNER: Highly efficient and economical. Atomizing type, properly constructed for long life and best results. Oil pump is furnished. Manufactured by Ray Oil Burner Company according to specifications. Pump manufactured by Detroit Lubricator Company.

FINISH: Black baked enamel. Top furnished in Kromloy cast iron (special stove top alloy).

SPECIFICATIONS NO. 25 CENTER FIREBOX RANGE

Range top	87-3/8" wide by 34-1/2" deep
Oven	27-1/4" wide by 22-5/8" deep by 15" high
Height to cooking top	33"
Height overall	58-1/4"
Pipe size	11"
High Shelf	87-3/8" long by 14" wide

VULCAN·HART MANUFACTURING CO.
2006 NORTH WESTERN PARKWAY
LOUISVILLE 3, KY.

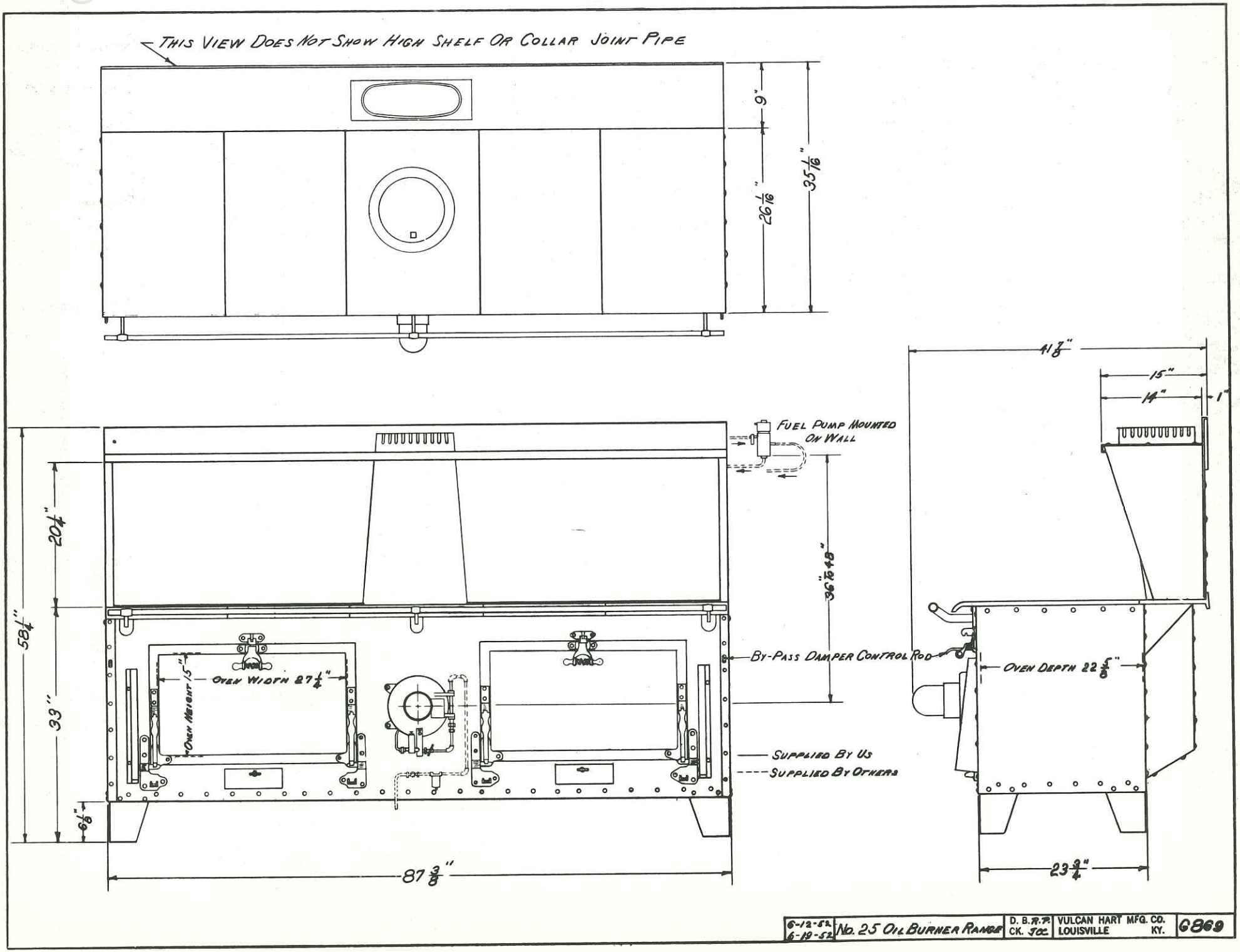
THIS VIEW DOES NOT SHOW HIGH SHELF OR COLLAR JOINT PIPE
9"
26 1/16"
35 1/16"
FUEL PUMP MOUNTED ON WALL
20 1/4"
58 1/4"
33"
6 1/8"
36 7/16"
48"
OVEN WIDTH 27 1/4"
OVEN HEIGHT 15"
BY-PASS DAMPER CONTROL ROD
SUPPLIED BY US
SUPPLIED BY OTHERS
87 3/8"
41 7/8"
15"
14"
1"
OVEN DEPTH 22 5/8"
23 3/4"
6-12-52
6-19-52
No. 25 OIL BURNER RANGE
D. B. R. P.
CK. JOC
VULCAN HART MFG. CO.
LOUISVILLE KY.
6869

HART

OIL BURNING RANGE

NO. 15HTL or NO. 15HTR - Hot Top Range
NO. 15GPL or NO. 15GPR - Griddle Plate Range

R - Designates right hand firebox
L - Designates left hand firebox

A heavy duty cooking range, built to U. S. Government specifications, which will give efficient service and lasting satisfaction.

This range is highly recommended for schools, churches, restaurants, roadside inns, and other places where a heavy, durable, highly efficient range is required. The oven is an exceptional baker and the top is designed for cooking large quantities of food.

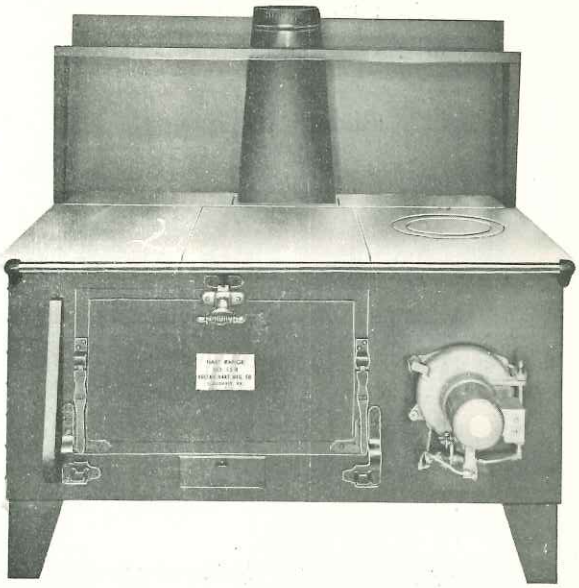

BODY: Range body of 14 gauge steel, tightly riveted, with heavy rivets, closely spaced. Mounted on removable legs of 10 gauge formed steel. Will support fully loaded stove without distortion. Hole in leg for bolting down. Range body is insulated, front, back, sides, and bottom. All interior parts, where flame might touch, are protected with cast iron or refractories.

OVEN: Oven sides, top, and bottom constructed of 12 gauge sheet steel. Back of oven 14 gauge steel. One heavy oven rack furnished.

OVEN DOORS: Constructed of sheet steel 16 gauge lining on heavy steel angle frame with 14 gauge exterior. Doors open downward, are spring counterbalanced, shelf type, and properly insulated. The doors are mounted on substantial bearing to support heavy load. Doors are fitted flush against the body of the range.

FIREBOX: Adequate size to give proper combustion. Lined with refractory material. Available with firebox on right or left side in single oven model.

TOPS: Top has two sections over ovens, with a separate section over firebox containing a lid and lid ring. The above plates are made of heavy cast iron, 1/2" thick, exclusive of 1/2" ribs, adequately supported. The sides of the top are square and flush with the sides of the body panels for use in battery, if desired. A guard rail across the front of the range is provided. On griddle plate ranges, the griddle replaces the two hot top sections. Highly polished with raised sides and back, with grease trough in front emptying into grease container mounted on front.

HIGH SHELF: 16 gauge steel, painted black, same as body of range. Shelf, itself, is 14" wide, rigidly braced and secured to range. Height from stove top to top of shelf - 21-1/4".

OIL BURNER: Highly efficient and economical. Atomizing type, properly constructed for long life and best results. Oil pump is furnished. Manufactured by Ray Oil Burner Company, according to specifications. Pump manufactured by Detroit Lubricator Company.

FINISH: Black baked enamel. Top furnished in Kromloy cast iron (special stove top alloy).

SPECIFICATIONS - NOS. 15HTL, 15HTR, 15GPL, 15GPR

Range top	53-1/8" wide by 34-1/2" deep
Oven	27-1/4" wide by 22-5/8" deep by 15" high
Height to cooking top	33"
Height overall	58-1/4"
Pipe size	8"
High shelf	53-1/8" long by 14" wide

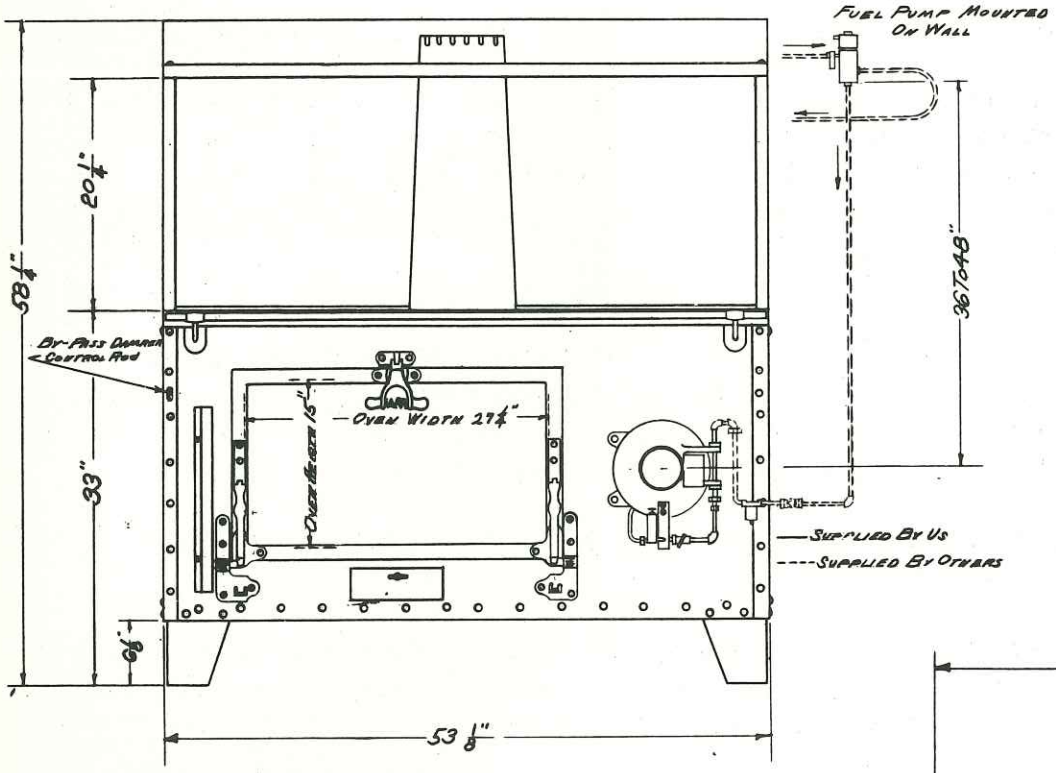

MODEL NO. 15-R OIL BURNER ON RIGHT HAND SIDE SHOWN
MODEL NO. 15-L OIL BURNER ON LEFT HAND SIDE

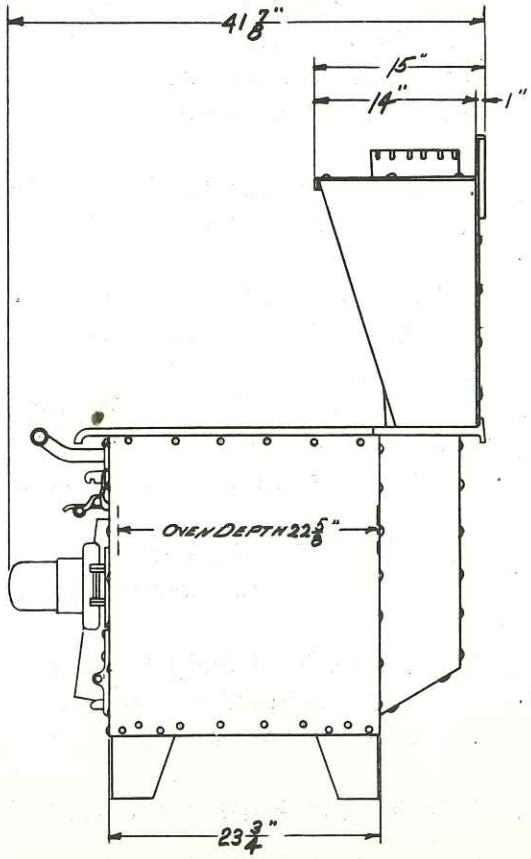

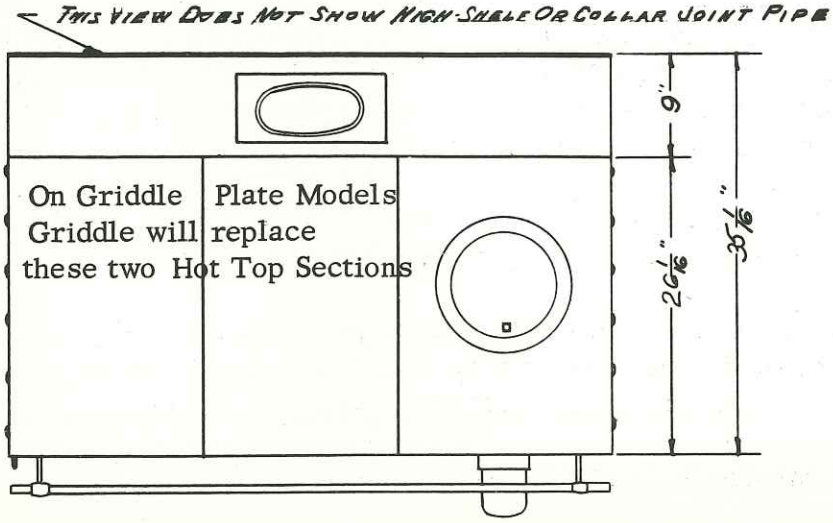

HEAVY DUTY
(ELECTRIC)

VH—201

VULCAN *Electric*

HEAVY DUTY RANGES

Model VR-1 ☐ Model VW-1 ☐ Model VS-1 ☐

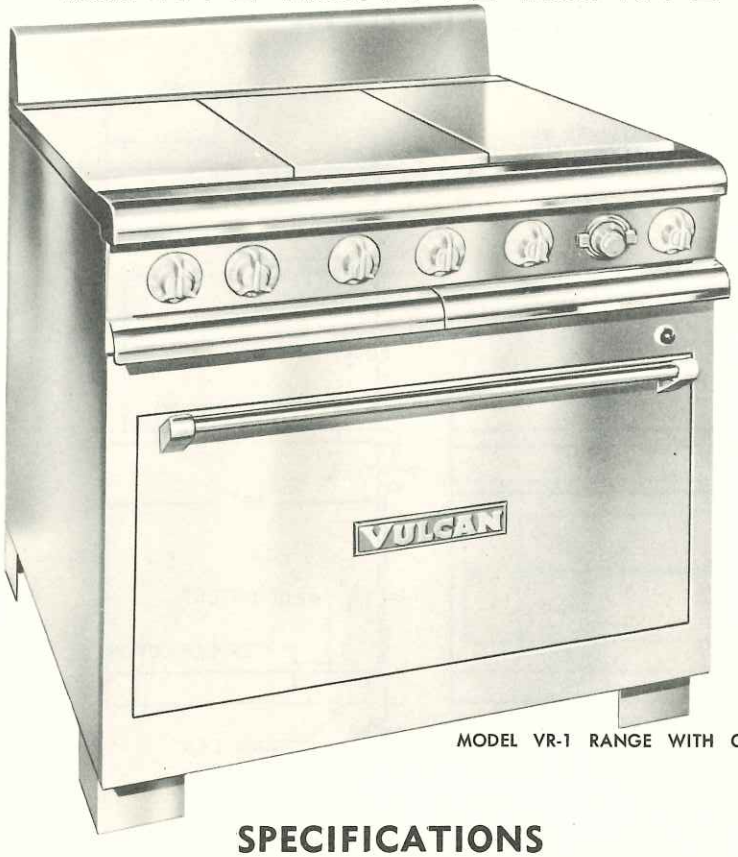

MODEL VR-1 RANGE WITH OVEN

MODEL VW-1 RANGE WITH WARMING OVEN AND HIGH SHELF

MODEL VS-1 RANGE WITH STORAGE COMPARTMENT

SPECIFICATIONS

TOP: Surface cooking area to be 36″ x 24″ consisting of 3-12″ x 24″ sections. Two controlled by a 3-heat switch. One plate, Thrift-E-Plate, to have two heating units front and back and each controlled by a 3-heat switch for added flexibility. Each section made of high quality non-warping alloy, ground and polished. Coil type heating units are supported in porcelain insulators and fitted between ribs on the bottom of the plate. Heating units are heavily insulated and completely enclosed. Each top plate rated at 5000 watts. Full width drip trays are provided under surface area. All switches and thermostats mounted on switch panel at convenience level.

OVEN: Large oven 31½″ deep x 23½″ wide x 13″ high is finished in vitreous enamel. Oven is equipped with top and bottom heating elements, each controlled by a 3-heat switch for measured directional heat. Oven is controlled by a thermostat with a range of 150 degrees F. to 550 degrees F. Oven pilot light is mounted on upper door frame. Oven is insulated with 2″ of spun glass fibre. Drop type oven door with full width handle provides a shelf in line with oven deck. An extra strong oven rack is provided which fits in U type channels on each side of oven. Oven sides are embossed for full circulation of heat. Door is suitably insulated with 1½″ of spun glass fibre.

CONSTRUCTION: One piece stainless steel front, no cracks or seams to pick up grease etc., removable 5″ stainless steel backsplash. Units may be placed back to back for island installations. Front top of range of high grade steel nickel plated for easy cleaning and long life. Deep troughs run the full width of the range front and back to catch excess spill overs.

FINISH: Body sides and back of unit painted and baked in clear and durable Silvertone finish. Front of range and backsplash all stainless steel standard finish. Entire oven and interior of oven door of vitreous enamel. Stainless steel sides and back optional extra.

OPTIONAL UNITS: Range top may be obtained with an open compartment base (with center shelf) shown as VS-1. It may also be obtained with a warming cabinet using a 500 watt heating unit operated by an on and off switch. Unit is provided with a drop type door similar in design and finish to oven door.

VULCAN-HART MANUFACTURING CO.
3600 North Point Boulevard, Baltimore 22, Maryland

VULCAN

Heavy Duty *Electric* Ranges

DIMENSIONS AND ELECTRIC DATA

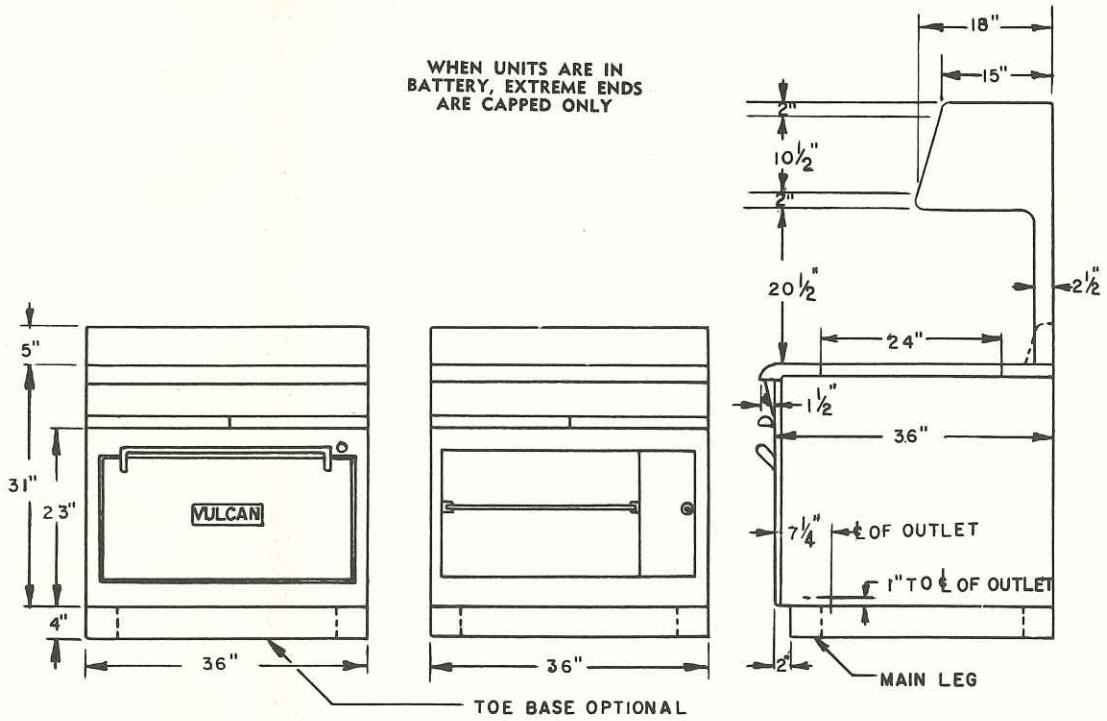

STANDARD VOLTAGES—208 VOLTS OR 240 VOLTS A.C.—SINGLE PHASE OR THREE PHASE

Dimensions & Weights

RANGE

Wide	36″
Height	31″
Height with legs	35″
Depth	36″

OVEN DIMENSIONS

Wide	23½″
Height	13″
Depth Door Closed	31½″

Approx. Weight

	SHIPPING	INSTALLED
VR-1	680	590
VS-1	560	475
VW-1	625	540

NOTE: Legs or toe base optional — No charge. Specify when ordering.

UNIT	TOTAL K.W. CONN.	3-PHASE LOADING KW PER PHASE		
		X-Y	Y-Z	X-Z
VR-1	21.7	10.	5.	6.7
VS-1	15.0	5.	5.	5.
VW-1	15.5	5.	5.	5.5

NOMINAL AMPS. PER LINE WIRE

	3-Phase						1-Phase	
	208 V.			240 V.			208 V.	240 V.
	X	Y	Z	X	Y	Z		
VR-1	67	63	46	59	51	40	104	90
VS-1	41	41	41	35	35	35	72	63
VW-1	44	41	44	38	35	38	75	65

SEE BROILER SHEET FOR RANGE & BROILER LOADING

Vulcan Hart Manufacturing Co., 3600 North Point Boulevard, Baltimore 22, Maryland

LOUISVILLE • NEW YORK • CHICAGO • LOS ANGELES • SAN FRANCISCO • BOSTON

VH—202

VULCAN *Electric*

HEAVY DUTY RANGES

Model VR-2 ☐ Model VW-2 ☐ Model VS-2 ☐

MODEL VR-2 RANGE WITH OVEN

MODEL VW-2 RANGE WITH WARMING OVEN AND HIGH SHELF

MODEL VS-2 RANGE WITH STORAGE COMPARTMENT

SPECIFICATIONS

TOP: Surface cooking area to be 36″ x 24″ consisting of three 12″ x 24″ sections. Each section is controlled by a high heat 250 degrees F. to 850 degrees F. thermostat which provides maximum flexibility. Plates may be used for a variety of uses from griddling to pan frying or stock pot cooking. Each section made of high quality non-warping alloy, ground and polished. Coil type heating units are supported in porcelain insulators and fitted between ribs on the bottom of the plate. Heating units are heavily insulated and completely enclosed. Full width drip trays are provided under surface area. All switches and thermostats mounted on switch panel at convenience level.

OVEN: Large oven 31½″ deep x 23½″ wide x 13″ high is finished in vitreous enamel. Oven is equipped with top and bottom heating elements, each controlled by a 3-heat switch for measured directional heat. Oven is controlled by a thermostat with a range of 150 degrees F. to 550 degrees F. Oven pilot light is mounted on upper door frame. Oven is insulated with 2″ of spun glass fibre. Drop type oven door with full width handle provides a shelf in line with oven deck. An extra strong oven rack is provided which fits in U type channels on each side of oven. Oven sides are embossed for full circulation of heat. Door is suitably insulated with 1½″ of spun glass fibre.

CONSTRUCTION: One piece stainless steel front, no cracks or seams to pick up grease etc., removable 5″ stainless steel backsplash. Units may be placed back to back for island installations. Front top of range of high grade steel nickel plated for easy cleaning and long life. Deep troughs run the full width of the range front and back to catch excess spill overs.

FINISH: Body sides and back of unit painted and baked in clear and durable Silvertone finish. Front of range and backsplash all stainless steel standard finish. Entire oven and interior of oven door of vitreous enamel. Stainless steel sides and back optional extra.

OPTIONAL UNITS: Range top may be obtained with an open compartment base (with center shelf) shown as VS-2 It may also be obtained with a warming cabinet using a 500 watt heating unit operated by an on and off switch. Unit is provided with a drop type door similar in design and finish to oven door.

VULCAN-HART MANUFACTURING CO.
3600 North Point Boulevard, Baltimore 22, Maryland

VULCAN

Heavy Duty *Electric* Ranges

DIMENSIONS AND ELECTRIC DATA

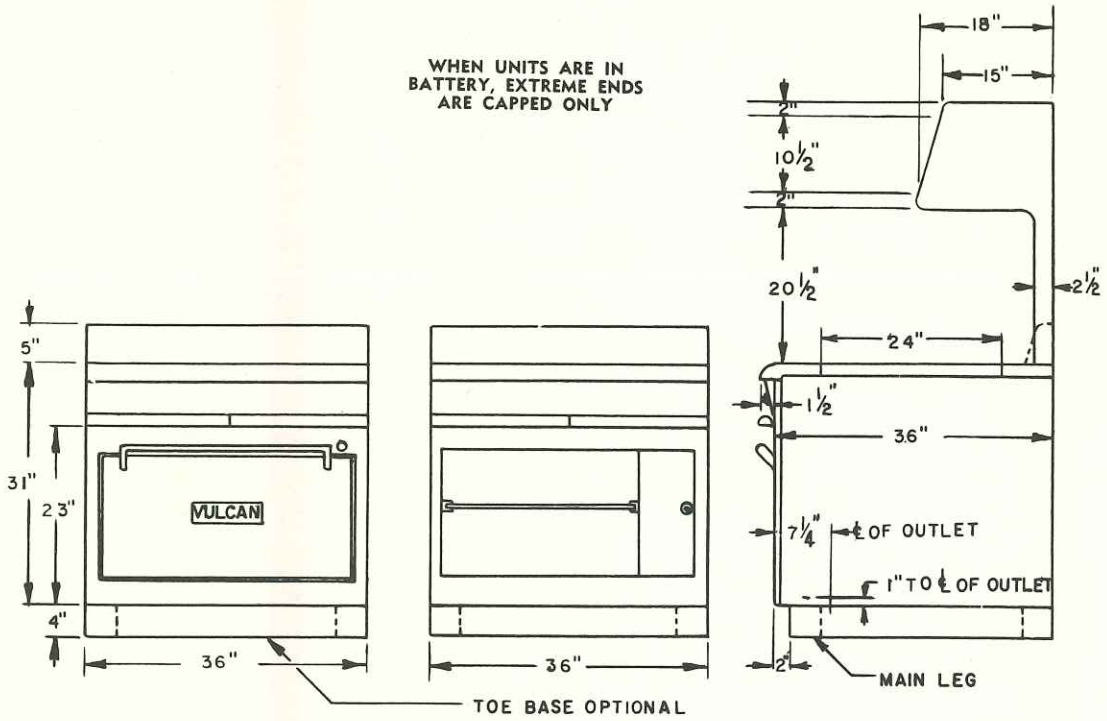

STANDARD VOLTAGES—208 VOLTS OR 240 VOLTS A.C.—SINGLE PHASE OR THREE PHASE

Dimensions & Weights

RANGE

Wide	36″
Height	31″
Height with legs	35″
Depth	36″

OVEN DIMENSIONS

Wide	23½″
Height	13″
Depth Door Closed	31½″

Approx. Weight

	SHIPPING	INSTALLED
VR-2	680	590
VS-2	560	475
VW-2	625	540

NOTE: Legs or toe base optional — No charge. Specify when ordering.

UNIT	TOTAL K.W. CONN.	3-PHASE LOADING KW PER PHASE		
		X-Y	Y-Z	X-Z
VR-2	21.7	10.	5.	6.7
VS-2	15.0	5.	5.	5.
VW-2	15.5	5.	5.	5.5

NOMINAL AMPS. PER LINE WIRE

	3-Phase						1-Phase	
	208 V.			240 V.			208 V.	240 V.
	X	Y	Z	X	Y	Z		
VR-2	67	63	46	59	51	40	104	90
VS-2	41	41	41	35	35	35	72	63
VW-2	44	41	44	38	35	38	75	65

SEE BROILER SHEET FOR RANGE & BROILER LOADING

Vulcan Hart Manufacturing Co., 3600 North Point Boulevard, Baltimore 22, Maryland

LOUISVILLE • NEW YORK • CHICAGO • LOS ANGELES • SAN FRANCISCO • BOSTON

VH—203

VULCAN *Electric*

HEAVY DUTY RANGES

Model VR-3 ☐ Model VW-3 ☐ Model VS-3 ☐

MODEL VR-3 RANGE WITH OVEN

MODEL VW-3 RANGE WITH WARMING OVEN AND HIGH SHELF

MODEL VS-3 RANGE WITH STORAGE COMPARTMENT

SPECIFICATIONS

TOP: Surface cooking area to be 36″ x 24″ consisting of two Hi-Heat tube (solid optional) type heating units and two 12″ x 24″ hot top sections. Each hot top section is controlled by a high heat 250 degree F. to 850 degrees F. thermostat which provides maximum flexibility. All-purpose hot top plates may be used for a variety of uses from griddling to pan frying or stock pot cooking. Each section made of high quality non-warping alloy, ground and polished. Coil type heating units are supported in porcelain insulators and fitted between ribs on the bottom of the plate. Heating units are heavily insulated and completely enclosed. Full width drip trays are provided under surface area. All switches and thermostats mounted on switch panel at convenience level.

OVEN: Large oven 31½″ deep x 23½″ wide x 13″ high is finished in vitreous enamel. Oven is equipped with top and bottom heating elements, each controlled by a 3-heat switch for measured directional heat. Oven is controlled by a thermostat with a range of 150 degrees F. to 550 degrees F. Oven pilot light is mounted on upper door frame. Oven is insulated with 2″ of spun glass fibre. Drop type oven door with full width handle provides a shelf in line with oven deck. An extra strong oven rack is provided which fits in U type channels on each side of oven. Oven sides are embossed for full circulation of heat. Door is suitably insulated with 1½″ of spun glass fibre.

CONSTRUCTION: One piece stainless steel front, no cracks or seams to pick up grease etc., removable 5″ stainless steel backsplash. Units may be placed back to back for island installations. Front top of range of high grade steel nickel plated for easy cleaning and long life. Deep troughs run the full width of the range front and back to catch excess spill overs.

FINISH: Body sides and back of unit painted and baked in clear and durable Silvertone finish. Front of range and backsplash all stainless steel standard finish. Entire oven and interior of oven door of vitreous enamel. Stainless steel sides and back optional extra.

OPTIONAL UNITS: Range top may be obtained with an open compartment base (with center shelf) shown as VS-3. It may also be obtained with a warming cabinet using a 500 watt heating unit operated by an on and off switch. Unit is provided with a drop type door similar in design and finish to oven door.

VULCAN-HART MANUFACTURING CO.
3600 North Point Boulevard, Baltimore 22, Maryland

VULCAN

Heavy Duty *Electric* Ranges

DIMENSIONS AND ELECTRIC DATA

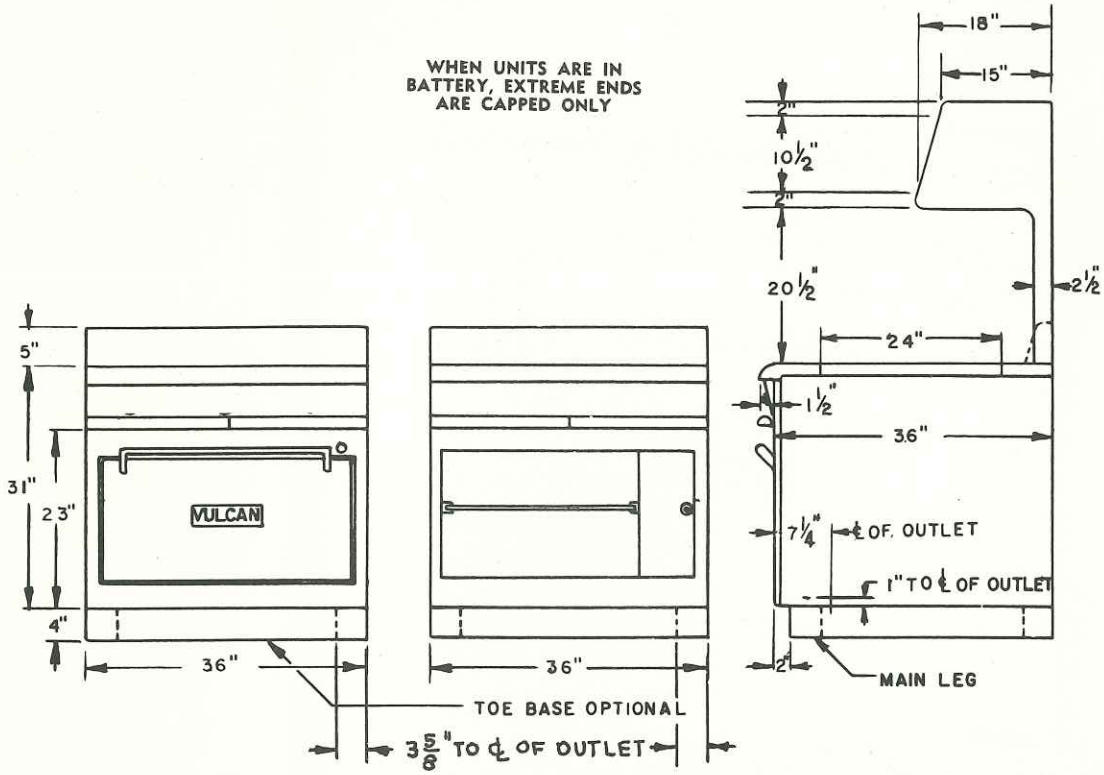

STANDARD VOLTAGES—208 VOLTS OR 240 VOLTS A.C.—SINGLE PHASE OR THREE PHASE

Dimensions & Weights

RANGE

Wide	36″
Height	31″
Height with legs	35″
Depth	36″

OVEN DIMENSIONS

Wide	23½″
Height	13″
Depth Door Closed	31½″

Approx. Weight

	SHIPPING	INSTALLED
VR-3	660	570
VS-3	540	455
VW-3	605	520

NOTE: Legs or toe base optional — No charge. Specify when ordering.

UNIT	TOTAL K.W. CONN.	3-PHASE LOADING KW PER PHASE		
		X-Y	Y-Z	X-Z
VR-3	20.7	9.0	5.	6.7
VS-3	14.0	5.	4.0	5.
VW-3	14.5	5.	4.0	5.5

NOMINAL AMPS. PER LINE WIRE

	3-Phase						1-Phase	
	208 V.			240 V.			208 V.	240 V.
	X	Y	Z	X	Y	Z		
VR-3	66	59	49	57	52	43	100	87
VS-3	41	38	38	36	33	33	67	58
W-3	44	38	40	38	33	35	70	60

SEE BROILER SHEET FOR RANGE & BROILER LOADING

Vulcan Hart Manufacturing Co., 3600 North Point Boulevard, Baltimore 22, Maryland

LOUISVILLE • NEW YORK • CHICAGO • LOS ANGELES • SAN FRANCISCO • BOSTON

VH—204

VULCAN *Electric*

HEAVY DUTY RANGES

Model VR-4 ☐ Model VW-4 ☐ Model VS-4 ☐

MODEL VR-4 RANGE WITH OVEN

MODEL VW-4 RANGE WITH WARMING OVEN AND HIGH SHELF

MODEL VS-4 RANGE WITH STORAGE COMPARTMENT

SPECIFICATIONS

TOP: Surface cooking area to be 36″ x 24″ consisting of six separate heating Hi-Heat solid type heating units. As an option, coiled tube type heating units may be substituted. Each heating unit controlled by an independent three heat switch. Range is ideal for schools or special diet kitchens in hospitals. Full width drip trays are provided under surface area. All switches and thermostats are mounted on switch panel at convenience level.

OVEN: Large oven 31½″ deep x 23½″ wide x 13″ high is finished in vitreous enamel. Oven is equipped with top and bottom heating elements, each controlled by a 3-heat switch for measured directional heat. Oven is controlled by a thermostat with a range of 150 degrees F. to 550 degrees F. Oven pilot light is mounted on upper door frame. Oven is insulated with 2″ of spun glass fibre. Drop type oven door with full width handle provides a shelf in line with oven deck. An extra strong oven rack is provided which fits in U type channels on each side of oven. Oven sides are embossed for full circulation of heat. Door is suitably insulated with 1½″ of spun glass fibre.

CONSTRUCTION: One piece stainless steel front, no cracks or seams to pick up grease etc., removable 5″ stainless steel backsplash. Units may be placed back to back for island installations. Front top of range of high grade steel nickel plated for easy cleaning and long life. Deep troughs run the full width of the range front and back to catch excess spill overs.

FINISH: Body sides and back of unit painted and baked in clear and durable Silvertone finish. Front of range and backsplash all stainless steel standard finish. Entire oven and interior of oven door of vitreous enamel. Stainless steel sides, top and back optional extra.

OPTIONAL UNITS: Range top may be obtained with an open compartment base (with center shelf) shown as VS-4 It may also be obtained with a warming cabinet using a 500 watt heating unit operated by an on and off switch. Unit is provided with a drop type door similar in design and finish to oven door.

VULCAN-HART MANUFACTURING CO.
3600 North Point Boulevard, Baltimore 22, Maryland

VULCAN

Heavy Duty *Electric* Ranges

DIMENSIONS AND ELECTRIC DATA

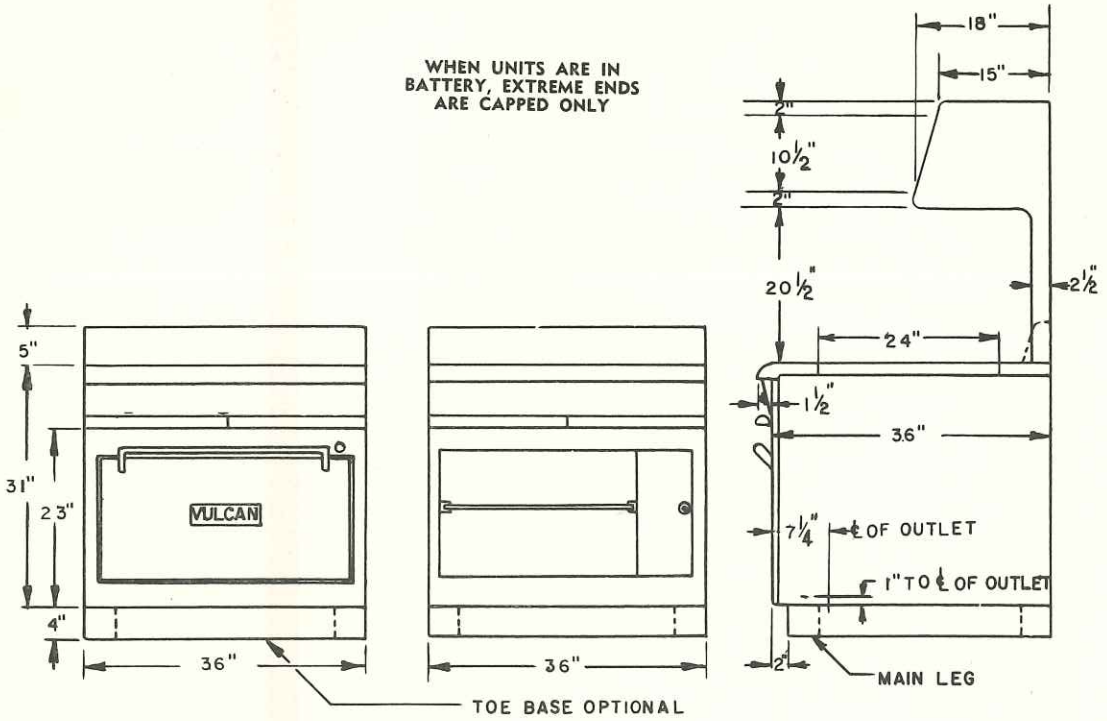

STANDARD VOLTAGES — 208 VOLTS OR 240 VOLTS A. C. — SINGLE PHASE OR THREE PHASE

Dimensions & Weights

RANGE

Wide	36″
Height	31″
Height with legs	35″
Depth	36″

OVEN DIMENSIONS

Wide	23½″
Height	13″
Depth Door Closed	31½″

Approx. Weight

	SHIPPING	INSTALLED
VR-4	600	515
VS-4	480	400
VW-4	535	440

NOTE: Legs or toe base optional — No charge. Specify when ordering.

UNIT	TOTAL K.W. CONN.	3-PHASE LOADING KW PER PHASE		
		X-Y	Y-Z	X-Y
VR-4	18.7	8.0	4.0	6.7
VS-4	12.0	4.0	4.0	4.0
VW-4	12.5	4.0	4.0	4.5

NOMINAL AMPS. PER LINE WIRE

	3-Phase						1-Phase	
	208 V.			240 V.			208 V.	240 V.
	X	Y	Z	X	Y	Z		
VR-4	61	51	45	53	44	39	90	78
VS-4	33	33	33	29	29	29	58	50
VW-4	36	33	36	31	29	31	60	52

SEE BROILER SHEET FOR RANGE & BROILER LOADING

Vulcan Hart Manufacturing Co., 3600 North Point Boulevard, Baltimore 22, Maryland

LOUISVILLE • NEW YORK • CHICAGO • LOS ANGELES • SAN FRANCISCO • BOSTON

VH—205

VULCAN *Electric*

HEAVY DUTY RANGES

Model VR-5 ☐ Model VW-5 ☐ Model VS-5 ☐

MODEL VR-5 RANGE WITH OVEN

MODEL VW-5 RANGE WITH WARMING OVEN AND HIGH SHELF

MODEL VS-5 RANGE WITH STORAGE COMPARTMENT

SPECIFICATIONS

TOP: This range has a one piece fry plate top controlled by 3 independent thermostats. Sufficient heating units are provided under the ½" steel plate to provide accurate and flexible heat under the largest cooking load possible. A raised edge is provided to prevent fat from reaching adjoining units. Top also available with cabinet base or warming oven.

OVEN: Large oven 31½" deep x 23½" wide x 13" high is finished in vitreous enamel. Oven is equipped with top and bottom heating elements, each controlled by a 3-heat switch for measured directional heat. Oven is controlled by a thermostat with a range of 150 degrees F. to 550 degrees F. Oven pilot light is mounted on upper door frame. Oven is insulated with 2" of spun glass fibre. Drop type oven door with full width handle provides a shelf in line with oven deck. An extra strong oven rack is provided which fits in U type channels on each side of oven. Oven sides are embossed for full circulation of heat. Door is suitably insulated with 1½" of spun glass fibre.

CONSTRUCTION: One piece stainless steel front, no cracks or seams to pick up grease etc., removable 5" stainless steel backsplash. Units may be placed back to back for island installations. Front top of range of high grade steel nickel plated for easy cleaning and long life. Deep troughs run the full width of the range front and back to catch excess spill overs.

FINISH: Body sides and back of unit painted and baked in clear and durable Silvertone finish. Front of range and backsplash all stainless steel standard finish. Entire oven and interior of oven door of vitreous enamel. Stainless steel sides and back optional extra.

OPTIONAL UNITS: Range top may be obtained with an open compartment base (with center shelf) shown as VS 5 It may also be obtained with a warming cabinet using a 500 watt heating unit operated by an on and off switch. Unit is provided with a drop type door similar in design and finish to oven door.

VULCAN-HART MANUFACTURING CO.
3600 North Point Boulevard, Baltimore 22, Maryland

VULCAN

Heavy Duty *Electric* Ranges

DIMENSIONS AND ELECTRIC DATA

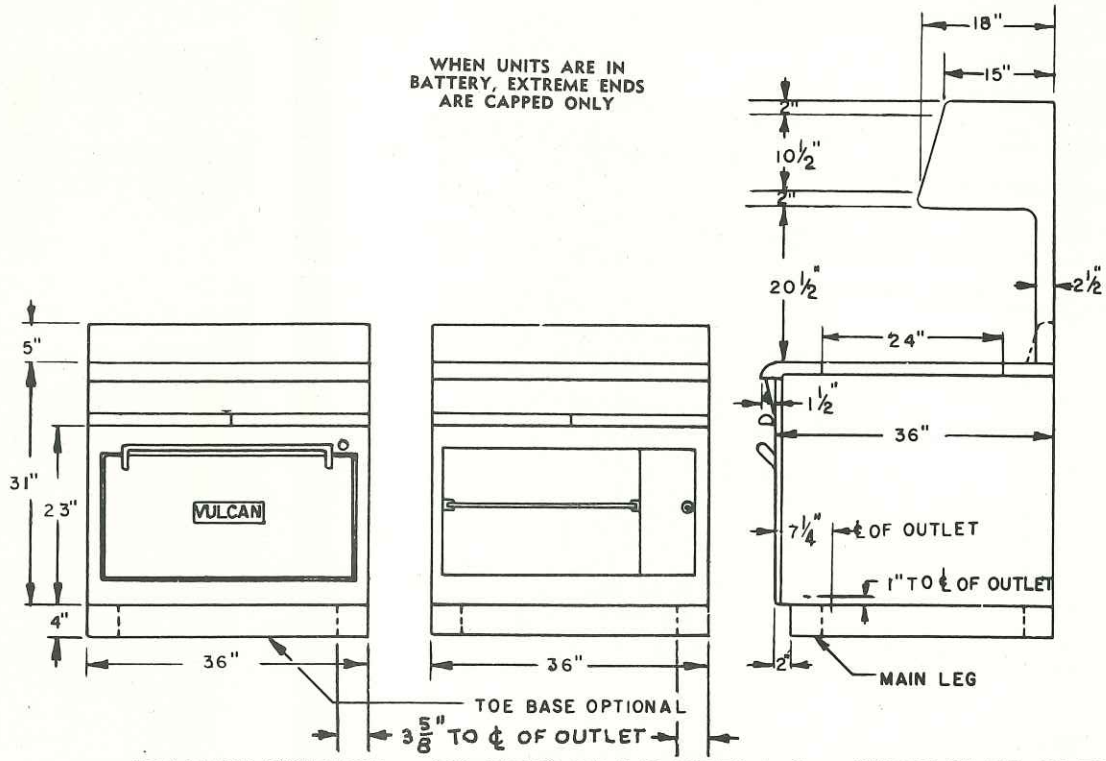

STANDARD VOLTAGES — 208 VOLTS OR 240 VOLTS A. C. — SINGLE PHASE OR THREE PHASE

Dimensions & Weights

RANGE	
Wide	36″
Height	31″
Height with legs	35″
Depth	36″
OVEN DIMENSIONS	
Wide	23½″
Height	13″
Depth Door Closed	31½″

Approx. Weight

	SHIPPING	INSTALLED
VR—5	600	515
VS—5	480	400
VW—S	535	440

NOTE: Legs or toe base optional. No Charge. Specify when ordering.

UNIT	TOTAL K.W. CONN.	3-PHASE LOADING KW PER PHASE		
		X-Y	Y-Z	X-Z
VR—5	22.9	8.1	8.1	6.7
VS—5	16.2	8.1	4.05	4.05
VW—5	16.7	8.1	4.05	4.55

NOMINAL AMPS. PER LINE WIRE

	3-Phase						1-Phase	
	208 V.			240 V.			208 V.	240 V.
	X	Y	Z	X	Y	Z		
VR—5	62	68	62	54	59	54	111	96
VS—5	52	52	34	45	45	30	78	68
VW—5	54	52	36	46	45	31	81	70

SEE BROILER SHEET FOR RANGE & BROILER LOADING

Vulcan Hart Manufacturing Co., 3600 North Point Boulevard, Baltimore 22, Maryland

LOUISVILLE • NEW YORK • CHICAGO • LOS ANGELES • SAN FRANCISCO • BOSTON

VH—206

VULCAN *Electric*

HEAVY DUTY RANGES

Model VR-6 ☐ Model VW-6 ☐ Model VS-6 ☐

MODEL VR-6 RANGE WITH OVEN

MODEL VW-6 RANGE WITH WARMING OVEN AND HIGH SHELF.

MODEL VS-6 RANGE WITH STORAGE COMPARTMENT

SPECIFICATIONS

TOP: Surface cooking area to be 36″ x 24″ consisting of two Hi-Heat tube (solid optional) type heating units and two 12″ x 24″ hot top sections. Each hot top section is controlled by a high heat 250 degree F. to 850 degrees F. thermostat which provides maximum flexibility. All-purpose hot top plates may be used for a variety of uses from griddling to pan frying or stock pot cooking. Each section made of high quality non-warping alloy, ground and polished. Coil type heating units are supported in porcelain insulators and fitted between ribs on the bottom of the plate. Heating units are heavily insulated and completely enclosed. Full width drip trays are provided under surface area. All switches and thermostats mounted on switch panel at convenience level.

OVEN: Large oven 31½″ deep x 23½″ wide x 13″ high is finished in vitreous enamel. Oven is equipped with top and bottom heating elements, each controlled by a 3-heat switch for measured directional heat. Oven is controlled by a thermostat with a range of 150 degrees F. to 500 degrees F. Oven pilot light is mounted on upper door frame. Oven is insulated with 2″ of spun glass fibre. Drop type oven door with full width handle provides a shelf in line with oven deck. An extra strong oven rack is provided which fits in U type channels on each side of oven. Oven sides are embossed for full circulation of heat. Door is suitably insulated with 1½″ of spun glass fibre.

CONSTRUCTION: One piece stainless steel front, no cracks or seams to pick up grease etc., removable 5″ stainless steel backsplash. Units may be placed back to back for island installations. Front top of range of high grade steel nickel plated for easy cleaning and long life. Deep troughs run the full width of the range front and back to catch excess spill overs.

FINISH: Body sides and back of unit painted and baked in clear and durable Silvertone finish. Front of range and backsplash all stainless steel standard finish. Entire oven and interior of oven door of vitreous enamel. Stainless steel sides and back optional extra.

OPTIONAL UNITS: Range top may be obtained with an open compartment base (with center shelf) shown as VS—6. It may also be obtained with a warming cabinet using a 500 watt heating unit operated by an on and off switch. Unit is provided with a drop type door similar in design and finish to oven door.

VULCAN·HART MANUFACTURING CO.
3600 North Point Boulevard, Baltimore 22, Maryland

VULCAN

Heavy Duty *Electric* Ranges

DIMENSIONS AND ELECTRIC DATA

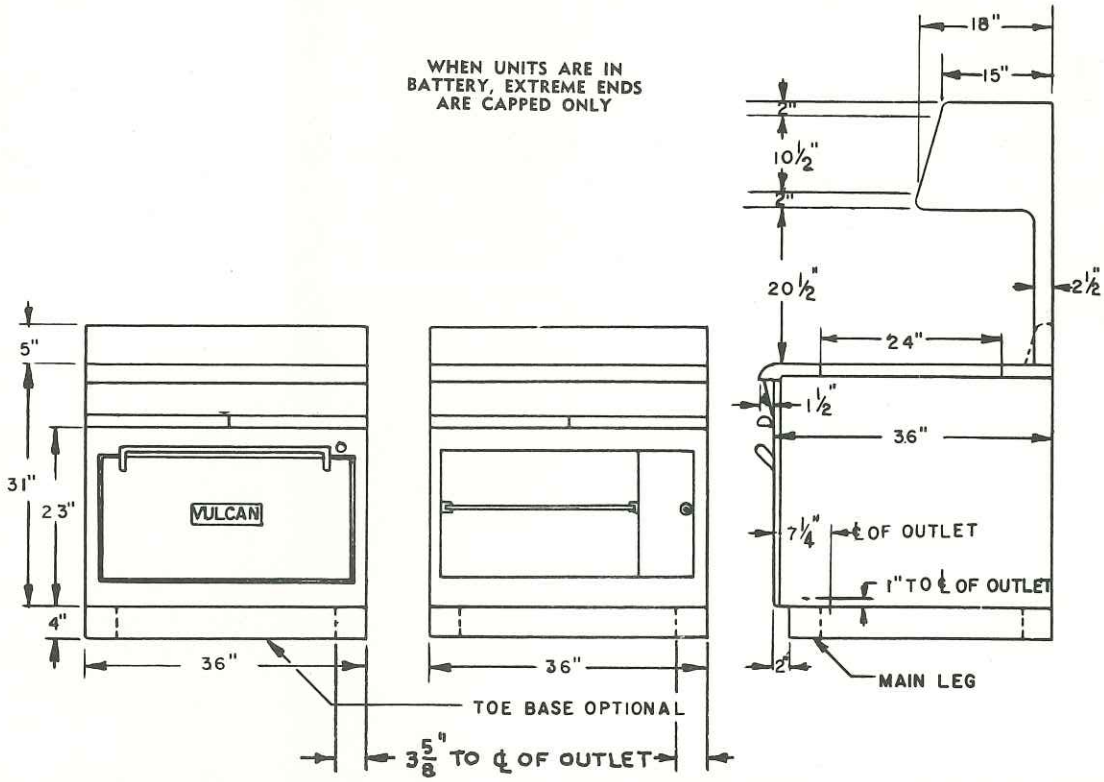

STANDARD VOLTAGES—208 VOLTS OR 240 VOLTS A.C.—SINGLE PHASE OR THREE PHASE

Dimensions & Weights

RANGE

Wide	36″
Height	31″
Height with legs	35″
Depth	36″

OVEN DIMENSIONS

Wide	23½″
Height	13″
Depth Door Closed	31½″

Approx. Weight

	SHIPPING	INSTALLED
V-6	540	455
VR-6	660	570
VW-6	605	520

NOTE: Legs or toe base optional — No charge. Specify when ordering.

UNIT	TOTAL K.W. CONN.	3-PHASE LOADING KW PER PHASE		
		X-Y	Y-Z	
VR-6	20.7	9.0	5.	6.7
VS-6	14.	5.	4.0	5.
VW-6	14.5	5.	4.0	5.5

NOMINAL AMPS. PER LINE WIRE

	3-Phase						1-Phase	
	208 V.			240 V.			208 V.	240 V.
	X	Y	Z	X	Y	Z		
VR-6	66	59	49	57	52	43	100	87
VS-6	41	38	38	36	33	33	67	58
VW-6	44	38	40	38	33	35	70	60

SEE BROILER SHEET FOR RANGE & BROILER LOADING

Vulcan Hart Manufacturing Co., 3600 North Point Boulevard, Baltimore 22, Maryland

LOUISVILLE • NEW YORK • CHICAGO • LOS ANGELES • SAN FRANCISCO • BOSTON

VH—207

VULCAN *Electric*

HEAVY DUTY EXPANDO UNITS

Model VEX-1 ☐ Model VEX-2 ☐ Model VEX-3 ☐

MODEL VEX-1 EXPANDO UNIT

MODEL VEX-3 EXPANDO UNIT WITH HIGH SHELF

MODEL VEX-2 EXPANDO UNIT

SPECIFICATIONS

GENERAL: Extension units are 12″ wide to add extra cooking surface when placed next to a range. These units make an ideal bakers stove when installed in a bake shop.

MODEL VEX-1

Is supplied with one 12″ x 24″ hot plate having elements front and back. Each element is controlled by a three heat switch.

MODEL VEX-3

Is supplied with a polished steel cooking top and has 2 Hi-Heat tubular type elements. These elements are each controlled by a three heat switch. Stainless Steel top optional extra. Solid type elements (illustrated) may be substituted.

MODEL VEX-2

Is supplied with one 12″ x 24″ fry plate. This plate has grease groves on each side and is controlled by a 150 degree F.-450 degree F. thermostat, and has independent pilot light.

CONSTRUCTION: Unit is 36″ deep and has a 5″ removable range matching backsplash. Legs are provided with leveling screws. Front of unit has removable panel for access to fuses, wiring, etc. Full width drip trays are provided under surface area.

FINISH: Body sides and back of Silvertone finish. Front Stainless Steel standard equipment. Front rail nickel plated steel, backsplash stainless steel. Either side or back may be obtained in Stainless Steel.

VULCAN·HART MANUFACTURING CO.
3600 North Point Boulevard, Baltimore 22, Maryland

VULCAN

Heavy Duty *Electric* Extension Units

DIMENSIONS AND ELECTRIC DATA

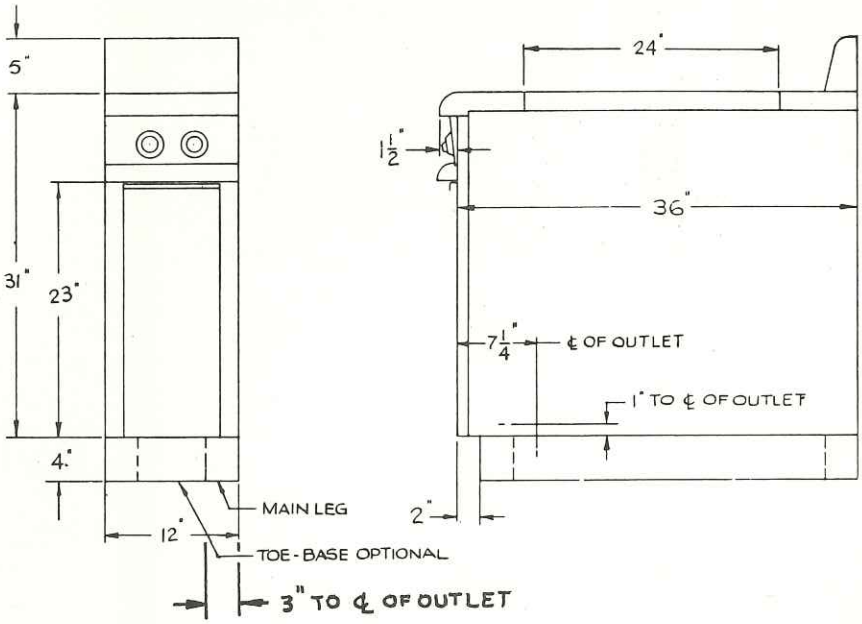

STANDARD VOLTAGES — 208 VOLTS OR 240 VOLTS A. C. — SINGLE PHASE

Dimensions & Weights

Wide	12"
Height	31"
Height With Legs	35"

Approx. Weight

	SHIPPING	INSTALLED
VEX-1	185	150
VEX-2	185	150
VEX-3	155	120

NOTE: Legs or toe base optional — No charge. Specify when ordering.

UNIT	TOTAL K.W. CONN.	AMPS PER LINE WIRE	
		208V	240V
VEX-1	5.	24.1	2 0.8
VEX-2	5.	24.1	20.8
VEX-3	4.	19.2	16.7

Vulcan Hart Manufacturing Co., 3600 North Point Boulevard, Baltimore 22, Maryland

LOUISVILLE • NEW YORK • CHICAGO • LOS ANGELES • SAN FRANCISCO • BOSTON

VULCAN *Electric*

DOUBLE DECK HIGH SHELVES

Model VDD-12 ☐ -18 ☐-20 ☐-36 ☐-42 ☐-48 ☐

MODEL VDD-48 HIGH SHELF

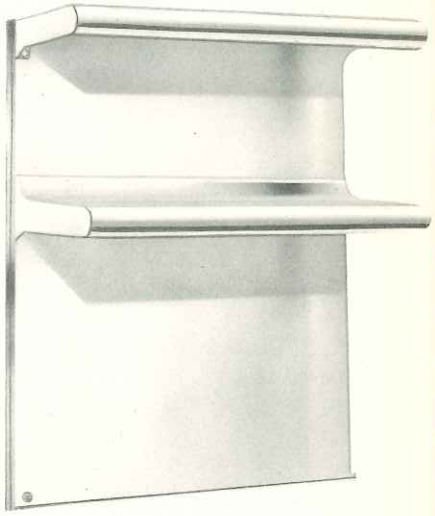

MODEL VDD-36 HIGH SHELF

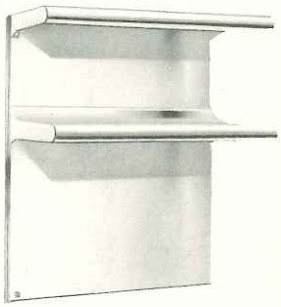

MODEL VDD-20 HIGH SHELF

SPECIFICATIONS

GENERAL: Illustrated high shelves may be used to fit over units of 12", 20", 36", 42" and 48" wide. These sizes will fit any unit, and with combinations of sizes, shelves may extend the full length of a battery. When shelves are used for battery installation only, extreme ends of overall battery are capped. Shelves are 17" deep and provide clearance of 20½" over top of range. Backsplash is removable from shelf frame work.

CONSTRUCTION: Heavy support brackets are provided to prevent forward tilt. High shelves are strongly built of heavy gauge steel, securely fastened to give years of satisfactory service.

FINISH: Double deck high shelf is made with backsplash of Stainless Steel and shelves of Apollo steel are standard equipment. Shelves also available in full Stainless Steel.

VULCAN·HART MANUFACTURING CO.
3600 North Point Boulevard, Baltimore 22, Maryland

VULCAN

Double Deck High Shelves

DIMENSIONS

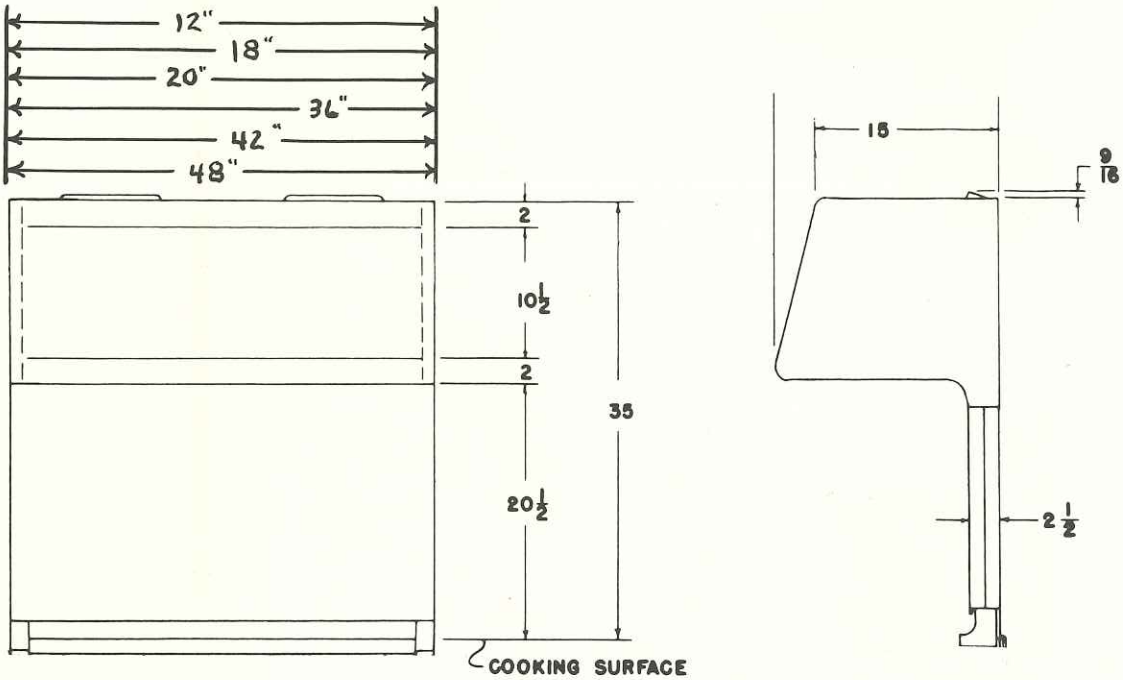

UNIT	WIDE	SHIPPING WEIGHT
VDD-12	12"	40 LBS.
VDD-18	18"	55 LBS.
VDD-20	20"	70 LBS.
VDD-36	36"	115 LBS.
VDD-42	42"	125 LBS.
VDD-48	48"	140 LBS.

VH—209

VULCAN *Electric*

HEAVY DUTY ELEVATED BROILERS

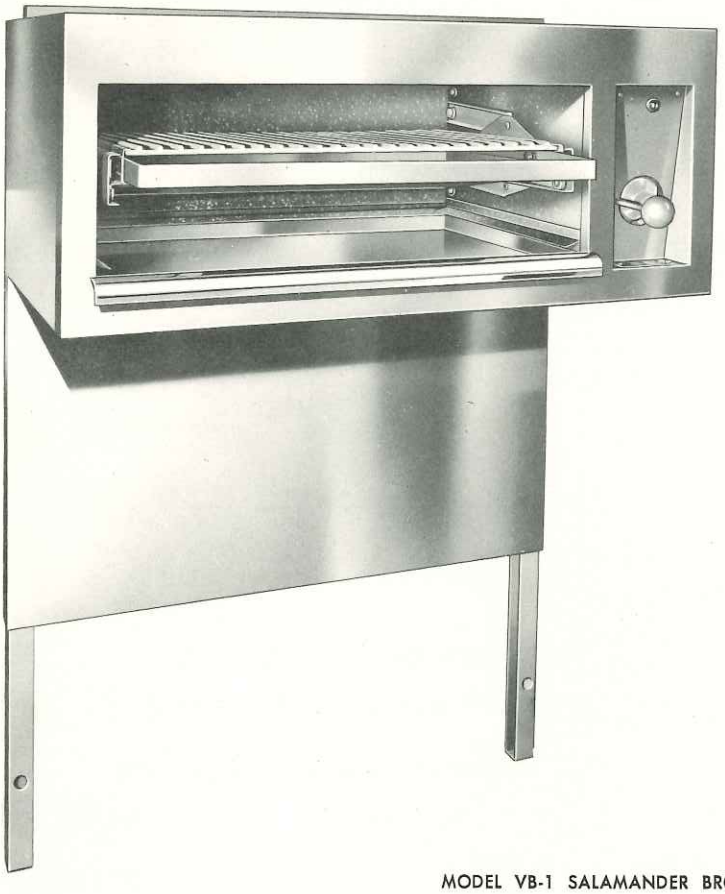

MODEL VB-1 SALAMANDER BROILER

MODEL VB-1 SALAMANDER BROILER
(MOUNTED OVER RANGE)

SPECIFICATIONS

GENERAL: Unit is designed and engineered to be mounted above cooking surface of any Vulcan Electric Range. Unit is 36″ wide and 19″ deep. It is mounted 21″ above surface of cooking top. Unit is fastened securely to body frame of range which does not allow forward tilt. Positive catch raising and lowering device allows grid to be raised or lowered 10 positions. This allows grid to be set in a variety of adjustments throughout 3½″. Grid may be raised to 1½″ from heating units.

HEATING UNITS: Broiler shall be equipped with two coil type heating units for fast pre-heating. Aluminized steel reflector is provided to reflect maximum heat onto grid. A reversible switch is provided to allow for variety of broiling heats. Signal light is provided to indicate when heating units are turned on.

CONSTRUCTION: Salamander body is welded and fastened to frame. Pull out rack operates on ball bearing glides. Drip shield is provided below rack for fast run off of fat out of heat zone. A stainless steel drip pan is provided out of heat zone to catch fat run off.

FINISH: Body sides and back of unit painted and baked in clear and durable Silvertone finish. Front of unit and backsplash all stainless steel standard finish. Entire interior of vitreous enamel. Stainless steel sides and back optional extra.

VULCAN

Smarter Design

Greater Flexibility

More Value

VULCAN·HART MANUFACTURING CO.
3600 North Point Boulevard, Baltimore 22, Maryland

VULCAN

Heavy Duty Salamander Broilers

DIMENSIONS AND ELECTRIC DATA

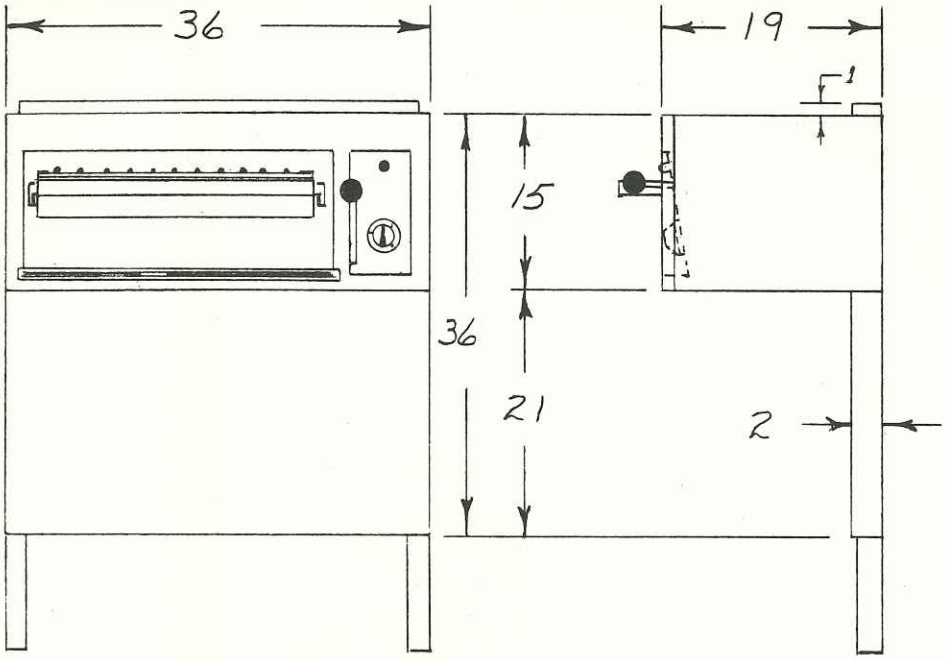

STANDARD VOLTAGES

208 VOLTS OR 240 VOLTS A.C.

SINGLE PHASE OR THREE PHASE

SHIPPING WEIGHT APPROX. 240 LBS.

UNIT	TOTAL K.W. CONN.	3-PHASE LOADING K.W. Per Phase			NOMINAL AMPERES PER LINE 3-PHASE 208V.			3-PHASE 240 V.			1-PHASE 208V.	1-PHASE 240V.
		X-Y	Y-Z	X-Z	X	Y	Z	X	Y	Z		
VB-1 BROILER	5.0	(Single Phase Only)									24.	20.5
VR-1 w/VB-1	26.7	10.0	10.0	6.7	70	84	70	61	72	61	128	111
VS-1 w/VB-1	20.0	10.0	5.0	5.0	64	64	42	55	55	36	96	83
VW-1 w/VB-1	20.5	10.0	5.0	5.5	66	64	44	57	55	39	99	86
VR-2 w/VB-1	26.7	10.0	10.0	6.7	70	84	70	61	72	61	128	111
VS-2 w/VB-1	20.0	10.0	5.0	5.0	64	64	42	55	55	36	96	83
VW-2 w/VB-1	20.5	10.0	5.0	5.5	66	64	44	57	55	39	99	86
VR-3 w/VB-1	25.7	9.0	10.0	6.7	66	79	70	57	69	61	124	107
VS-3 w/VB-1	19.0	10.0	4.0	5.0	64	60	37	55	52	33	91	79
VW-3 w/VB-1	19.5	10.0	4.0	5.5	66	60	40	57	52	35	94	81
VR-4 w/VB-1	23.7	8.0	9.0	6.7	62	71	66	53	62	57	114	99
VS-4 w/VB-1	17.0	9.0	4.0	4.0	55	55	34	48	48	29	82	71
VW-4 w/VB-1	17.5	9.0	4.0	4.5	57	56	36	50	48	31	84	73
VR-5 w/VB-1	27.9	10.4	8.1	9.4	75	71	67	65	61	58	134	116
VS-5 w/VB-1	21.2	10.4	5.4	5.4	62	62	41	54	54	36	102	88
VW-5 w/VB-1	21.7	10.4	5.4	5.9	63	62	43	55	54	37	104	90

Vulcan Hart Manufacturing Co., 3600 North Point Boulevard, Baltimore 22, Maryland

LOUISVILLE • NEW YORK • CHICAGO • LOS ANGELES • SAN FRANCISCO • BOSTON

VH—210

VULCAN Electric

SPREADER AND ENCLOSURE PLATES

Model VSP-6 ☐ Model VSP-12 ☐ Model VSP-18 ☐

Model VSPD-6 ☐ Model VSPD-12 ☐ Model VSPD-18 ☐

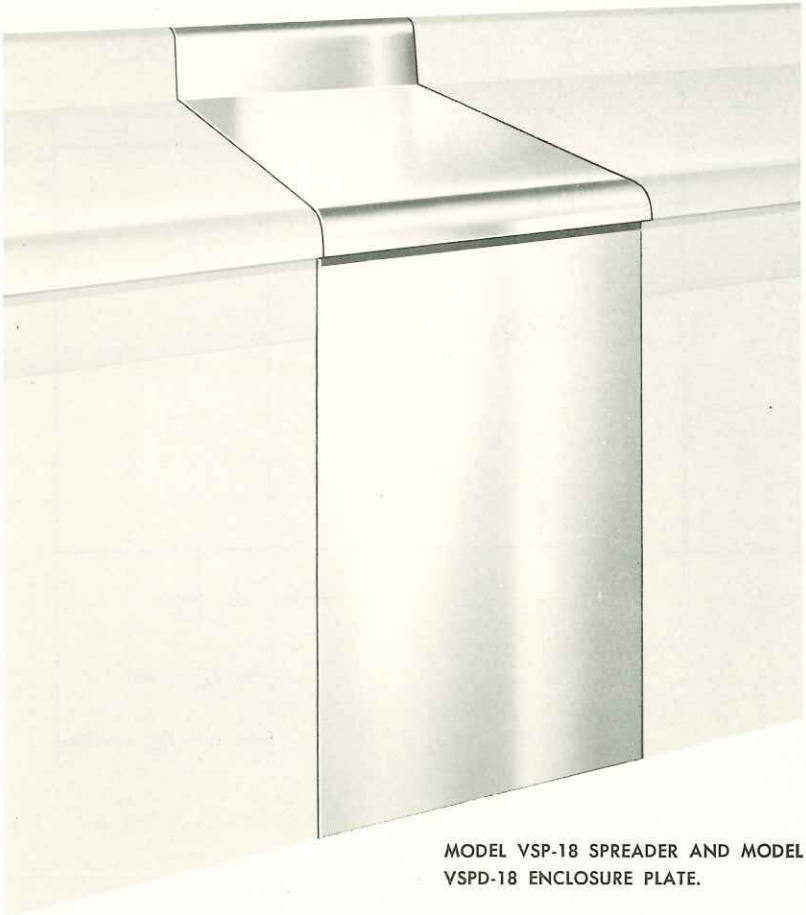

MODEL VSP-18 SPREADER AND MODEL VSPD-18 ENCLOSURE PLATE.

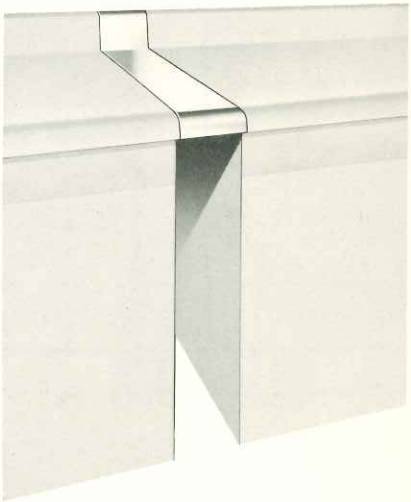

MODEL VSP-6 SPREADER PLATE

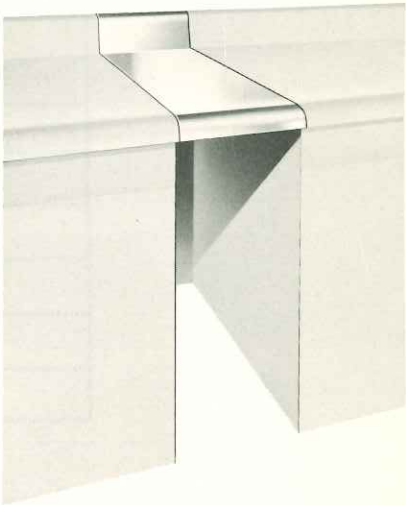

MODEL VSP-12 SPREADER PLATE

SPECIFICATIONS

GENERAL: Spreader plates and enclosure panels in 6", 12" or 18" wide to afford additional working space between ranges. A 6" spreader is recommended between fryers and ranges, or ranges and wall, or sectional ovens.

CONSTRUCTION: Spreader plates are strongly built and have range matching backsplash. They are securely fastened to adjoining units and will support the heaviest required load.

FINISH: Spreaders have highly polished steel tops matching range. Spreaders are chrome polished to match front of range. Backsplash of Stainless Steel. Enclosure panels are gleaming Stainless Steel to match range fronts and securely fastened to top and body of adjoining units. Spreaders plates may be obtained in Stainless Steel if required.

END SHELVES: End shelves shall be fabricated of steel, polished to match front and back of ranges. These may be attached to either right or left side of ranges by means of brackets. Unit to have matching backsplash to match ranges. End shelves, of at least 6", must be attached if ranges are to be installed close to a wall. This is necessary to meet Underwriters' Laboratory requirements. Spreaders available in Stainless Steel at extra cost.

VULCAN-HART MANUFACTURING CO.
3600 North Point Boulevard, Baltimore 22, Maryland

VULCAN

Heavy Duty Spreader And Enclosure Plates

DIMENSIONS

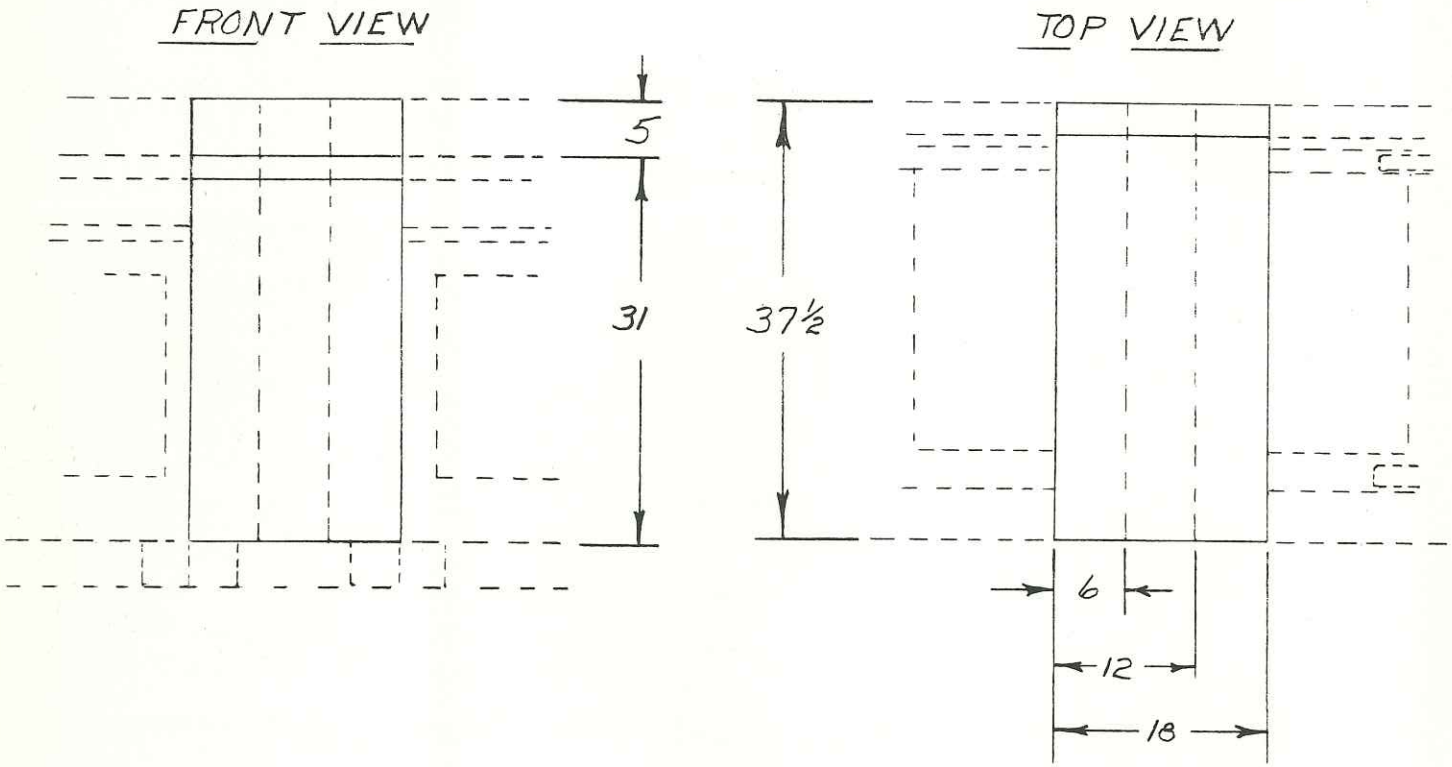

UNIT	WIDE	Approximate Shipping Weight
VSP6	6″	25
VSP12	12″	40
VSP18	18″	55
VSPD6	6″	10
VSPD12	12″	18
VSPD18	18″	25

Vulcan Hart Manufacturing Co., 3600 North Point Boulevard, Baltimore 22, Maryland

LOUISVILLE • NEW YORK • CHICAGO • LOS ANGELES • SAN FRANCISCO • BOSTON

VH—211

VULCAN *Electric*

HEAVY DUTY DEEP FAT FRYERS

Model VF-1 ☐

MODEL VF-1 FRYER

MODEL VF-1 FRYER WITH KETTLE REMOVED.

SPECIFICATIONS

GENERAL: The VF-1 offers the ultimate in fryer flexibility and convenience. All controls, pilot lights and switches at front of unit. They are mounted at the convenience level and out of the heat and grease zone. Heating units are engineered to provide full heating on both sides and across the bottom of kettle. An adequate cool zone is provided in the bottom of the kettle to accumulate crumbs etc. Heating units are counter-balanced and raised by means of a locking push pull handle on the front of the unit. Flush front swing type door is provided for access to bottom of fryer. Doors swings to 240° to allow full access to fryer during cleaning operation. Thermostat control may be set at 250°F. to allow for burning off of carbonized fat on elements. Top of unit has raised edges at all points to prevent fat overflow entering unit or flowing down sides. Grease overflow container is provided at front of unit. Unit equipped with toggle switch to turn on unit. Red signal light indicates power on. Green signal light indicates if fat in fry kettle is at pre-set temperature set by thermostat knob. Thermostat calibrated from 200 degrees F. to 400 degrees F. Basket supports attached to fat container which hold baskets in two positions. Siphon with filter bags, duplicate kettle available as optional extra.

FINISH: Entire front of unit and removeable range matching backsplash of stainless steel standard equipment. Top of unit of polished nickel plated steel. Door handle and handle on grease drawer of polished chrome plated steel. Body sides and back of unit are painted and baked in clear and durable Silvertone finish.

VULCAN

Smarter Design

Greater Flexibility

More Value

VULCAN-HART MANUFACTURING CO.
3600 North Point Boulevard, Baltimore 22, Maryland

VULCAN

Heavy Duty *Electric* Deep Fat Fryers

DIMENSIONS AND ELECTRIC DATA

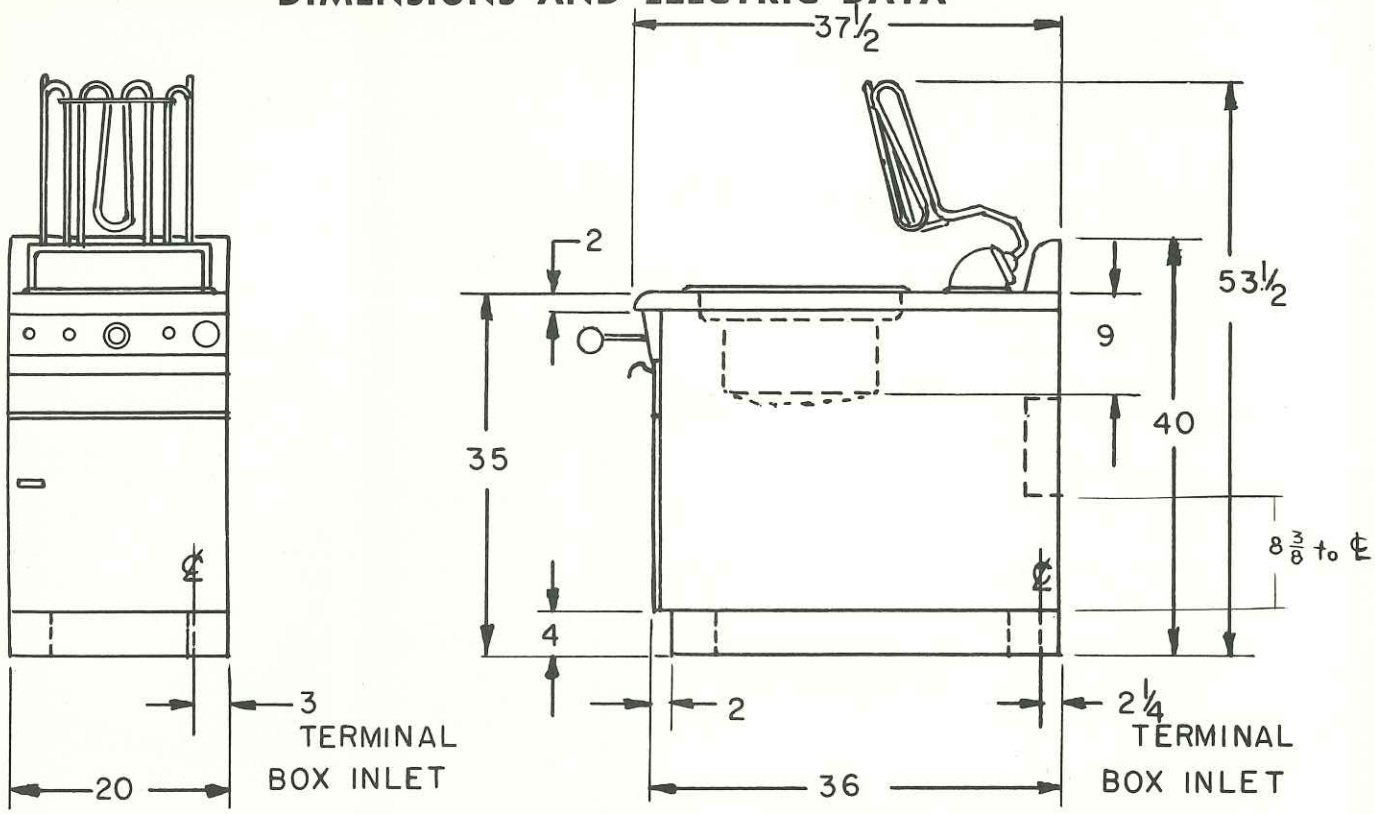

STANDARD VOLTAGES — 208 VOLTS OR 240 VOLTS A. C. — SINGLE PHASE OR THREE PHASE

FRYER

	INCHES
DIMENSIONS	
Height (Incl. Legs)	35″
Height - Incl. Backsplash	40″
Width	20″
Depth	36″
Legs Removable	4″
FAT CONTAINER	
Width	12½″
Depth	15⅝″
FOAM COMPARTMENT	
Width	14¾″
Depth	19¾″

FRYING CAPACITY	LBS. PER HR. RAW WEIGHT
POTATOES	
Raw To Finish	62
Blanch Only	80
Brown Only	275
OYSTERS	115
CHICKEN-CUT	95
CROQUETTES	235
FISH (HALIBUT)	135
VEAL CUTLETS	80

3-PHASE LOADING—KW PER PHASE

X-Y	Y-Z	X-Z
4.2	3.9	3.9

NOMINAL AMPS. PER LINE WIRE

3-Phase						1-Phase	
208 V.			240 V.			208 V.	240 V.
X	Y	Z	X	Y	Z		
34	34	33	29	29	28	57.7	52.2

FAT CAPACITY 30 LBS.

Time To Preheat To 350° F 5 Min.
Input To Maintain 350° F 700 Watts
Wattage 12 K.W.

WEIGHT APPROX.

Installed	175 Lbs.
Shipping	225 Lbs.

Vulcan Hart Manufacturing Co., 3600 North Point Boulevard, Baltimore 22, Maryland

LOUISVILLE • NEW YORK • CHICAGO • LOS ANGELES • SAN FRANCISCO • BOSTON

VULCAN *Electric*

GENERAL PURPOSE OVENS

Model VO-02 ☐ Model VO-01 ☐ Model VO-1NB ☐

MODEL VO-02 DOUBLE SECTION OVEN

MODEL VO-01 WITH LOW LEGS

MODEL VO-01 WITH HIGH LEGS

SPECIFICATIONS

GENERAL: Unit may be supplied with or without legs. One section may become part of a range battery with a 36″ work section top. When single section is provided a 5″ stainless steel backsplash is provided to match back of other units in battery. A Salamander broiler may be mounted over a single oven section if desired.

OVENS: Large oven 31½″ deep x 23½″ wide x 13″ high is finished in vitreous enamel. Oven is equipped with top and bottom heating units each controlled by a three heat switch for measured directional heat. Oven is controlled by a thermostat with a range of 150 degrees F. to 550 degrees F. Oven pilot light is mounted on oven door frame. Oven is insulated with 2″ of spun glass fibre. Drop type oven door with cool, full width handle provides a shelf in line with oven deck. Door is capable of supporting 175 lbs. dead weight without showing signs of appreciable distortion. An extra strong oven rack is provided which fits in U type channels on each side of oven. Embossed oven walls allow for complete circulation of heat at all times. Door is suitably insulated with 1½″ of spun glass fibre. All switches and thermostats mounted at convenience level.

FINISH: Entire front to be Stainless Steel standard equipment. Body sides and back of unit are painted and baked in clear and durable Silvertone finish. 5″ backsplash when supplied is of stainless steel. Stainless Steel optional on sides or back.

VULCAN-HART MANUFACTURING CO.
3600 North Point Boulevard, Baltimore 22, Maryland

VULCAN

General Purpose *Electric* Ovens

DIMENSIONS AND ELECTRIC DATA

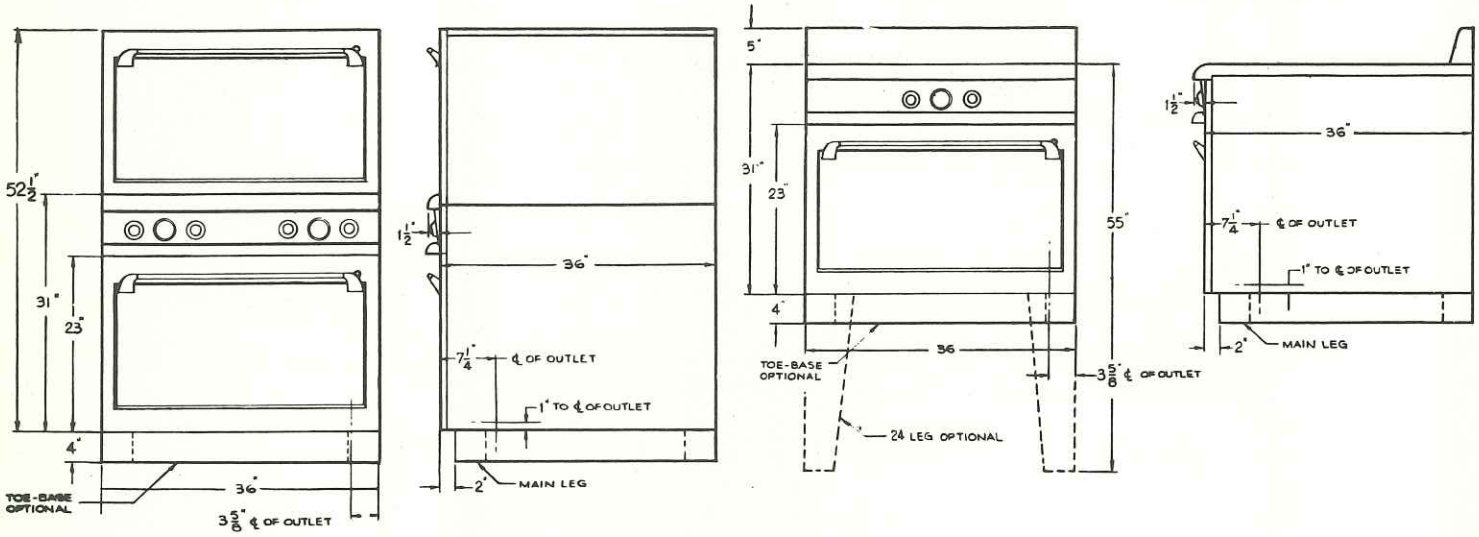

STANDARD VOLTAGES — 208 VOLTS OR 240 VOLTS A. C. — SINGLE PHASE OR THREE PHASE

Dimensions & Weights

Wide		36"
Height	4111	31"
	4112	52½"
Add for Legs		4"
Add for Long Legs		24"
Depth		36"
Oven Dimensions		
Wide		23½"
Height		13"
Depth Door Closed		31½"

Approx. Weight

	SHIPPING	INSTALLED
VO-01	485	390
VO-01 & Salamander	700	520
VO-02	855	675

NOTE: Legs or toe base optional. No charge. Specify when ordering.

UNIT	TOTAL K.W. CONN.	3-PHASE LOADING KW PER PHASE		
		X-Y	Y-Z	X-Z
VO-01	6.7	4.0	—	2.7
VO-01 & Salamander	11.7	4.0	5.	2.7
VO-02	13.4	4.	4.	5.4

NOMINAL AMPS. PER LINE WIRE

	3-Phase						1-Phase	
	208 V.			240 V.			208 V.	240 V.
	X	Y	Z	X	Y	Z		
VO-01	28	20	13	24	17	11	32.2	27.9
VO-01 & Salamander	28	38	33	24	33	28	56.3	48.8
VO-02	39	33	39	34	29	34	64.4	55.8

Vulcan Hart Manufacturing Co., 3600 North Point Boulevard, Baltimore 22, Maryland

LOUISVILLE • NEW YORK • CHICAGO • LOS ANGELES • SAN FRANCISCO • BOSTON

VH—213

VULCAN *Electric*

HEAVY DUTY BAKE OVENS

Model VO-444 ☐ Model VO-044 ☐ Model VO-004 ☐

MODEL VO-004 OVEN 1 SECTION — 2 PAN

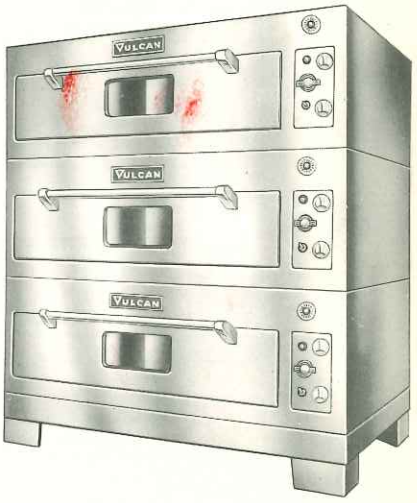

MODEL VO-444 OVEN 3 SECTION — 2 PAN

MODEL VO-044 OVEN 2 SECTION — 2 PAN

SPECIFICATIONS

GENERAL: This two, pan sectional bake oven is available in one, two or three section units and may be installed with or without legs. It may be placed next to a wall or any other oven or unit not operating at excessive heat temperature. Each section has its own deck light and switch and may be operated independently of any other unit.

INTERIOR: Bake oven has a complete interior of vitreous enamel. Deck lights are recessed in the oven wall and provide suitable illumination for all baking requirements. Oven deck is of 7/8" one piece Core Plate to provide even heat throughout the entire deck surface. A suitable vent is provided to carry off excess moisture during baking.

INSULATION: Entire unit, sides, back, top and bottom is insulated with minimum of 4" spun fibre, non-sagging, vermin-proof insulation. During operation it is possible to place a hand on any part of oven outer body.

OVEN DOOR: The oven door extends the full width of the oven. It has two inches of spun fibre insulation and each door is provided with a double plate observation window. This 5½" x 11" heat-proof glass enables the baking operation to be observed without opening the door and causing temperature drop. The interior of the door is of vitreous enamel and the exterior of stainless steel standard finish. Oven door is capable of supporting 200 lbs. without appreciable distortion.

HEATING UNITS: Tubular type heating units are suspended under the oven deck and in the top of each oven section. These units are controlled by top and bottom 3-heat reversible switches. These provide directional heat and make up 15 combinations of heat patterns for all types of baking. Quantity of heat is controlled by a 150° to 550° F. thermostat and each section has an independent pilot light.

CONTROLS: Controls are recessed in a hinged panel to right of oven doors. This panel provided access to switches, lights, wiring, fuses and oven door hinge assembly. The oven need never be moved from the installed position. A 60 minute long ring timer is provided on each section. The ringing of this timer acts as a reminder to remove baked products from the oven.

FINISH: Entire front of all sections are of stainless steel as standard equipment. Body sides, top and back are painted and baked in clear and durable Silvertone Finish. Suitable legs are provided as indicated and are also finished similar to body. Stainless steel sides, legs, top or back are available as an optional extra.

Steam injectors on bake ovens optional.

VULCAN·HART MANUFACTURING CO.
3600 North Point Boulevard, Baltimore 22, Maryland

VULCAN

Heavy Duty *Electric* Bake Ovens

DIMENSIONS AND ELECTRIC DATA

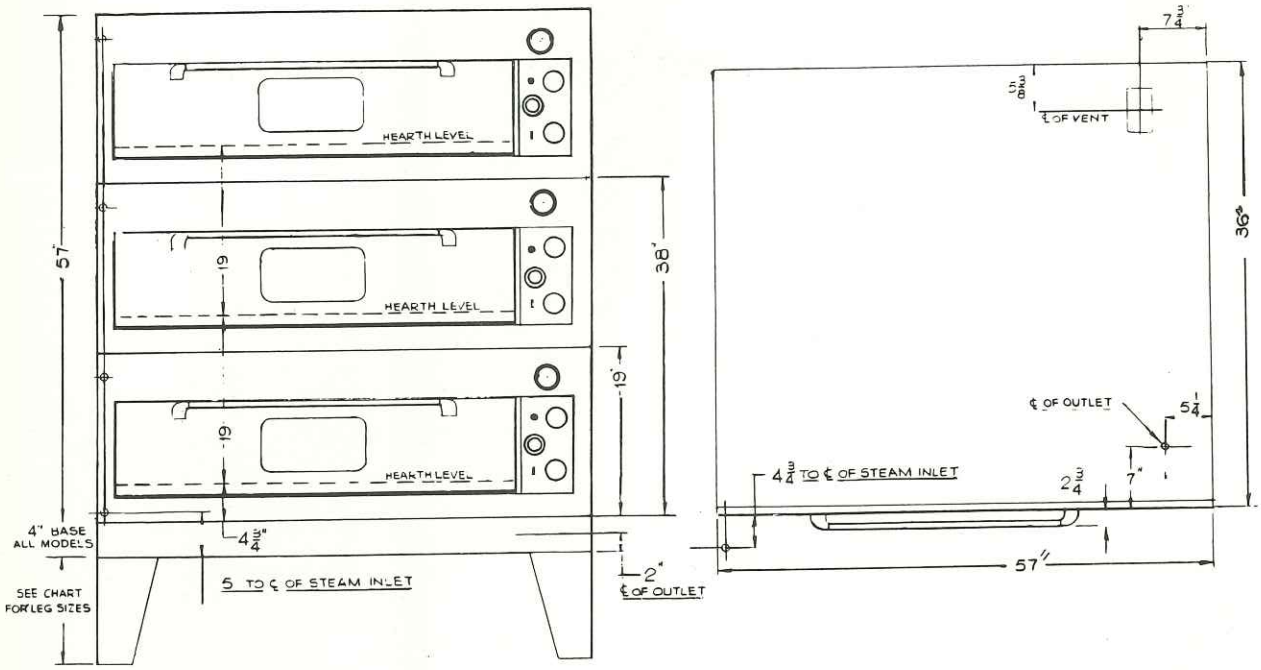

STANDARD VOLTAGES — 208 VOLTS OR 240 VOLTS A. C. — SINGLE PHASE OR THREE PHASE

Dimensions & Weights

	INTERIOR	EXTERIOR
Wide	40″	57″
Height	8″	19″
Depth	28 1/4″	36″
		LEGS
1 Section		27″
2 Section		23″
3 Section		4″

Approx. Weight

	SHIPPING	INSTALLED
VO-004	700	600
VO-044	1200	1075
VO-444	1800	1530

NOTE: Legs optional. No charge. Specify when ordering.

DECK: Core plate standard. Steel optional.

UNIT	TOTAL K.W. CONN.	3-PHASE LOADING KW PER PHASE		
		X-Y	Y-Z	X-Z
VO-004	6.2	2.6	—	3.6
VO-044	12.4	5.2	3.6	3.6
VO-444	18.6	6.2	6.2	6.2

NOMINAL AMPS. PER LINE WIRE

	3-Phase						1-Phase	
	208 V.			240 V.			208 V.	240 V.
	X	Y	Z	X	Y	Z		
VO-004	26	13	18	23	11	15	30	26
VO-044	37	37	30	32	32	26	60	52
VO-444	52	52	52	45	45	45	90	78

Vulcan Hart Manufacturing Co., 3600 North Point Boulevard, Baltimore 22, Maryland

LOUISVILLE • NEW YORK • CHICAGO • LOS ANGELES • SAN FRANCISCO • BOSTON

VH—213A

VULCAN *Electric*

PIZZA HEAVY DUTY BAKE OVENS

Model VO-444P ☐ Model VO-044P ☐ Model VO-004P ☐

PIZZA OVEN

MODEL VO-004P PIZZA OVEN 1 SECTION — 2 PAN

MODEL VO-444P PIZZA OVEN 3 SECTION — 2 PAN

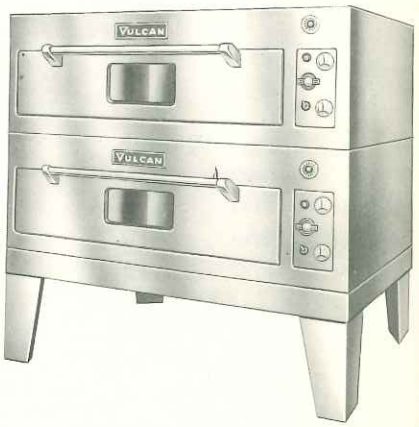

MODEL VO-044P PIZZA OVEN 2 SECTION — 2 PAN

SPECIFICATIONS

GENERAL: These two pan ovens are available in one, two or three section units and may be installed with or without legs. It may be placed next to a wall or any other oven or unit not operating at excessive heat temperature. Each section has its own deck light and switch and may be operated independently of any other unit.

INTERIOR: Pizza oven has a complete interior of vitreous enamel. Deck lights are recessed in the oven wall and provide suitable illumination for all baking requirements. Oven deck is of 7/8″ one piece Core Plate to provide even heat throughout the entire deck surface. A suitable vent is provided to carry off excess moisture during baking.

INSULATION: Entire unit, sides, back, top and bottom is insulated with minimum of 4″ spun fibre, non-sagging, vermin-proof insulation. During operation it is possible to place a hand on any part of oven outer body.

OVEN DOOR: The oven door extends the full width of the oven. It has two inches of spun fibre insulation and each door is provided with a double plate observation window. This 5½″ x 11″ heat-proof glass enables the baking operation to be observed without opening the door and causing temperature drop. The interior of the door is of vitreous enamel and the exterior of stainless steel standard finish. Oven door is capable of supporting 200 lbs. without appreciable distortion.

HEATING UNITS: Tubular type heating units are suspended under the oven deck and in the top of each oven section. These units are controlled by top and bottom 3-heat reversible switches. These provide directional heat and make up 15 combinations of heat patterns for all types of baking. Quantity of heat is controlled by a 300° to 700° F. thermostat and each section has an independent pilot light. 300° F. to 700° F. will turn out perfect 5 minute pizza.

CONTROLS: Controls are recessed in a hinged panel to right of oven doors. This panel provides access to switches, lights, wiring, fuses and oven door hinge assembly. The oven need never be moved from the installed position. A 60 minute long ring timer is provided for each section. The ringing of the timer acts as a reminder to remove pizza from the oven.

FINISH: Entire front of all sections are of stainless steel as standard equipment. Body sides, top and back are painted and baked in clear and durable Silvertone Finish. Suitable legs are provided as indicated and are also finished similar to body. Stainless steel sides, legs, top or back are available as an optional extra.

VULCAN·HART MANUFACTURING CO.
3600 North Point Boulevard, Baltimore 22, Maryland

VULCAN

Heavy Duty *Electric* Pizza Ovens

DIMENSIONS AND ELECTRIC DATA

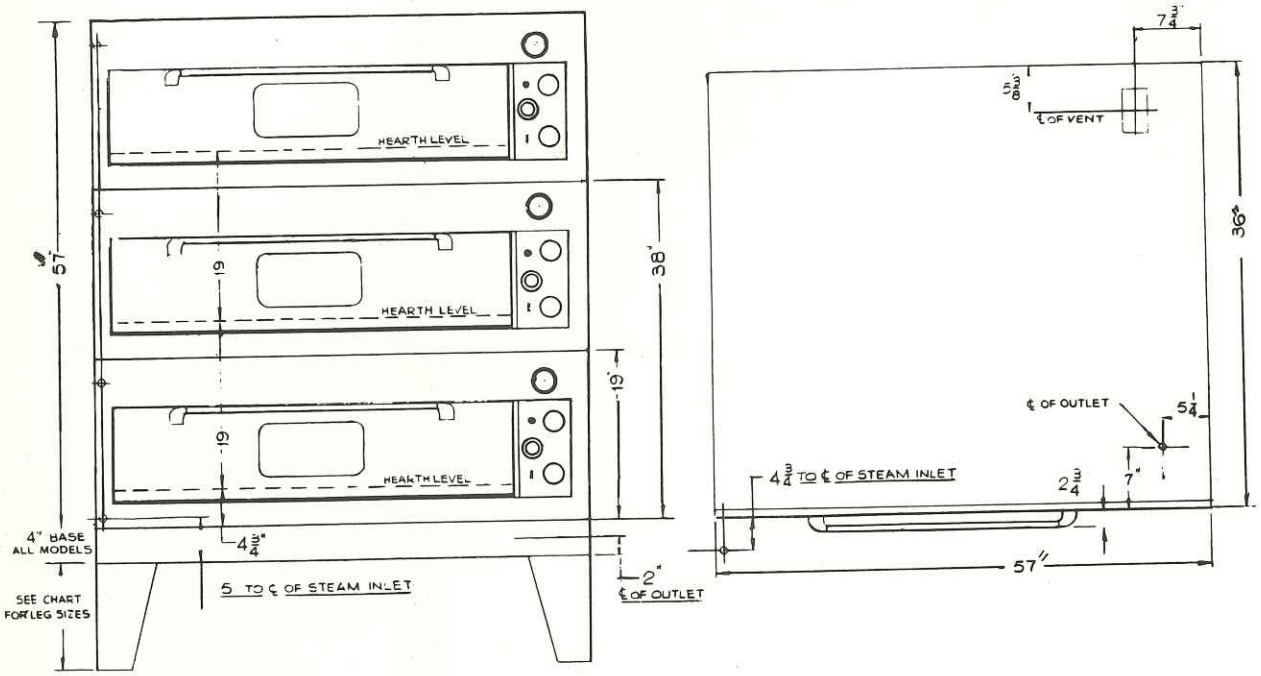

STANDARD VOLTAGES — 208 VOLTS OR 240 VOLTS A. C. — SINGLE PHASE OR THREE PHASE

Dimensions & Weights

	INTERIOR	EXTERIOR
Wide	40"	57"
Height	8"	19"
Depth	28 ¼"	36"
		LEGS
1 Section		27"
2 Section		23"
3 Section		4"

Approx. Weight

	SHIPPING	INSTALLED
VO-004P	700	600
VO-044P	1200	1075
VO-444P	1800	1530

NOTE: Legs optional. No charge. Specify when ordering.

DECK: Core plate standard. Steel optional.

UNIT	TOTAL K.W. CONN.	3-PHASE LOADING KW PER PHASE		
		X-Y	Y-Z	X-Z
VO-004P	7.2	3.6	—	3.6
VO-044P	14.4	7.2	3.6	3.6
VO-444P	21.6	7.2	7.2	7.2

NOMINAL AMPS. PER LINE WIRE

	3-Phase						1-Phase	
	208 V.			240 V.			208 V.	240 V.
	X	Y	Z	X	Y	Z		
VO-004P	30	18	18	26	15	15	35	30
VO-044P	46	46	30	40	40	26	69	60
VO-444P	60	60	60	52	52	52	104	90

Vulcan Hart Manufacturing Co., 3600 North Point Boulevard, Baltimore 22, Maryland

LOUISVILLE • NEW YORK • CHICAGO • LOS ANGELES • SAN FRANCISCO • BOSTON

VULCAN *Electric*

HEAVY DUTY BAKE OVENS

Model VO-666 ☐ Model VO-066 ☐ Model VO-006 ☐

MODEL VO-006 OVEN 1 SECTION — 4 PAN

MODEL VO-666 OVEN 3 SECTION — 4 PAN

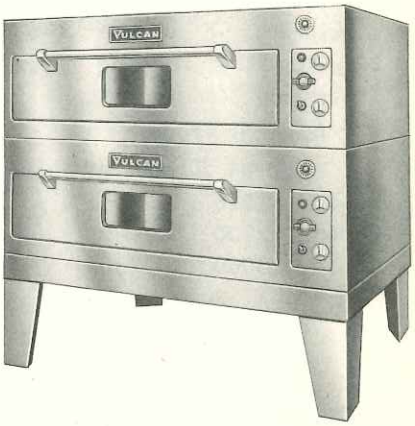

MODEL VO-066 OVEN 2 SECTION— 4 PAN

SPECIFICATIONS

GENERAL: This four, pan sectional bake oven is available in one, two or three section units and may be installed with or without legs. It may be placed next to a wall or any other oven or unit not operating at excessive heat temperature. Each section has its own deck light and switch and may be operated independently of any other unit.

INTERIOR: Bake oven has a complete interior of vitreous enamel. Deck lights are recessed in the oven wall and provide suitable illumination for all baking requirements. Oven deck is of 7/8″ one piece Core Plate to provide even heat throughout the entire deck surface. A suitable vent is provided to carry off excess moisture during baking.

INSULATION: Entire unit, sides, back, top and bottom is insulated with minimum of 4″ spun fibre, non-sagging, vermin-proof insulation. During operation it is possible to place a hand on any part of oven outer body.

OVEN DOOR: The oven door extends the full width of the oven. It has two inches of spun fibre insulation and each door is provided with a double plate observation window. This 5½″ x 11″ heat-proof glass enables the baking operation to be observed without opening the door and causing temperature drop. The interior of the door is of vitreous enamel and the exterior of stainless steel standard finish. Oven door is capable of supporting 200 lbs. without appreciable distortion.

HEATING UNITS: Tubular type heating units are suspended under the oven deck and in the top of each oven section. These units are controlled by top and bottom 3-heat reversible switches. These provide directional heat and make up 15 combinations of heat patterns for all types of baking. Quantity of heat is controlled by a 150° to 550° F. thermostat and each section has an independent pilot light.

CONTROLS: Controls are recessed in a removeable panel to right of oven doors. This panel provides access to switches, lights, wiring, fuses and door hinge assembly. The oven need never be moved from the installed position. A 60 minute long ring timer is provided for each section. The ringing of the timer acts as a reminder to remove baked goods from the oven.

FINISH: Entire front of all sections are of stainless steel as standard equipment. Body sides, top and back are painted and baked in clear and durable Silvertone Finish. Suitable legs are provided as indicated and are also finished similar to body. Stainless steel sides, legs, top or back are available as an optional extra.

A 60 minute long ring timer is provided for each section.

VULCAN·HART MANUFACTURING CO.
3600 North Point Boulevard, Baltimore 22, Maryland

VULCAN

Heavy Duty *Electric* Bake Ovens

DIMENSIONS AND ELECTRIC DATA

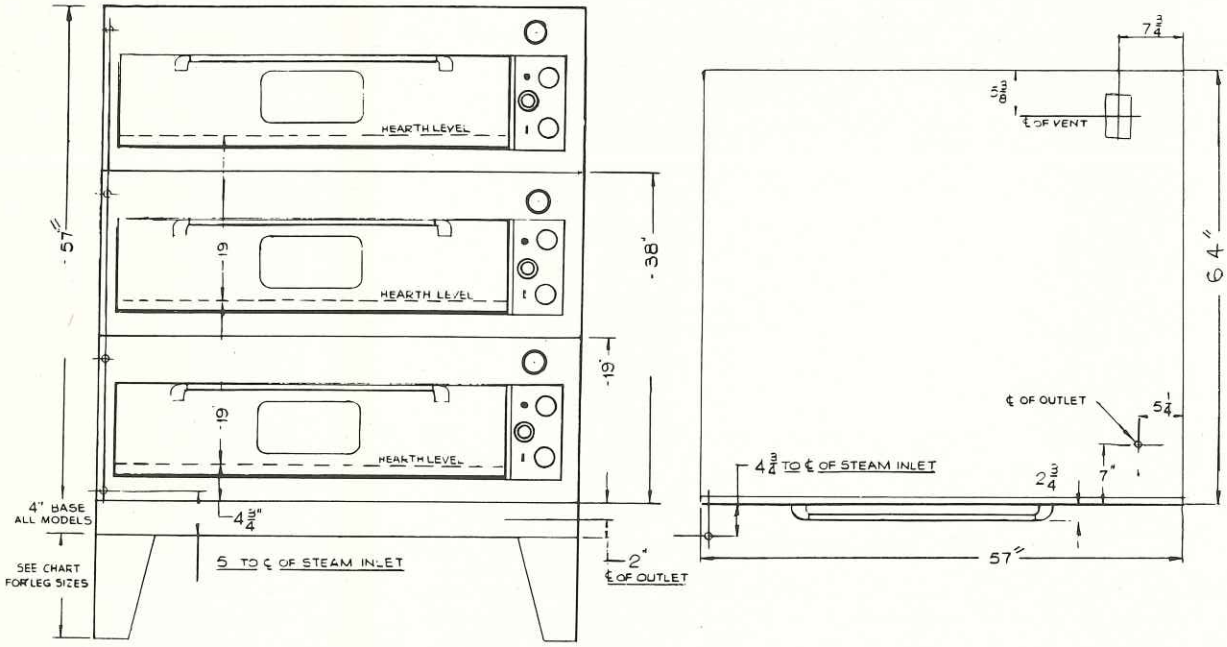

Dimensions & Weights

	INTERIOR	EXTERIOR
Wide	40"	57"
Height	8"	19"
Depth	56 1/4"	64"
		LEGS
1 Section		27"
2 Section		23"
3 Section		4"

Approx. Weight

	SHIPPING	INSTALLED
VO-006	1225	1115
VO-066	2100	1980
VO-666	3000	2750

NOTE: Legs optional. No charge. Specify when ordering.

DECK: Core plate standard. Steel optional.

STANDARD VOLTAGES — 208 VOLTS OR 240 VOLTS A. C. — SINGLE PHASE OR THREE PHASE

UNIT	TOTAL K.W. CONN.	3-PHASE LOADING KW PER PHASE		
		X-Y	Y-Z	X-Z
VO-006	7.5	2.7	4.8	—
VO-066	15.0	4.8	4.8	5.4
VO-666	22.5	7.5	7.5	7.5

NOMINAL AMPS. PER LINE WIRE

	3-Phase						1-Phase	
	208 V.			240 V.			208 V.	240 V.
	X	Y	Z	X	Y	Z		
VO-006	24	32	14	20	28	11	37	32.5
VO-066	43	40	43	36	30	36	74	65
VO-666	61	61	61	53	53	53	111	97.5

Vulcan Hart Manufacturing Co., 3600 North Point Boulevard, Baltimore 22, Maryland

LOUISVILLE • NEW YORK • CHICAGO • LOS ANGELES • SAN FRANCISCO • BOSTON

VULCAN *Electric*

HEAVY DUTY BAKE OVENS

Model VO-777 ☐ Model VO-077 ☐ Model VO-007 ☐

MODEL VO-007 OVEN 1 SECTION — 6 PAN

MODEL VO-777 OVEN 3 SECTION — 6 PAN

MODEL VO-077 OVEN 2 SECTION — 6 PAN

SPECIFICATIONS

GENERAL: This six pan sectional bake oven is available in one, two or three section units and may be installed with or without legs. It may be placed next to a wall or any other oven or unit not operating at excessive heat temperature. Each section has its own deck light and switch and may be operated independently of any other unit.

INTERIOR: Bake oven has a complete interior of vitreous enamel. Deck lights are recessed in the oven wall and provide suitable illumination for all baking requirements. Oven deck is of 7/8″ one piece Core Plate to provide even heat throughout the entire deck surface. A suitable vent is provided to carry off excess moisture during baking.

INSULATION: Entire unit, sides, back, top and bottom is insulated with minimum of 4″ spun fibre, non-sagging, vermin-proof insulation. During operation it is possible to place a hand on any part of oven outer body.

OVEN DOOR: The oven door extends the full width of the oven. It has two inches of spun fibre insulation and each door is provided with a double plate observation window. This 5½″ x 11″ heat-proof glass enables the baking operation to be observed without opening the door and causing temperature drop. The interior of the door is of vitreous enamel and the exterior of stainless steel standard finish. Oven door is capable of supporting 200 lbs. without appreciable distortion.

HEATING UNITS: Tubular type heating units are suspended under the oven deck and in the top of each oven section. These units are controlled by top and bottom 3-heat reversible switches. These provide directional heat and make up 15 combinations of heat patterns for all types of baking. Quantity of heat is controlled by a 150° to 550° F. thermostat and each section has an independent pilot light.

CONTROLS: Controls are recessed in a removeable panel to right of oven doors. This panel provides access to switches, lights, wiring, fuses and door hinge assembly. The oven need never be moved from the installed position. A 60 minute long ring timer is provided for each section. The ringing of the timer acts as a reminder to remove baked goods from the oven.

FINISH: Entire front of all sections are of stainless steel as standard equipment. Body sides, top and back are painted and baked in clear and durable Silvertone Finish. Suitable legs are provided as indicated and are also finished similar to body. Stainless steel sides, legs, top or back are available as an optional extra.

A 60 minute long ring timer is provided for each section.

VULCAN·HART MANUFACTURING CO.
3600 North Point Boulevard, Baltimore 22, Maryland

VULCAN

Heavy Duty *Electric* Bake Ovens

DIMENSIONS AND ELECTRIC DATA

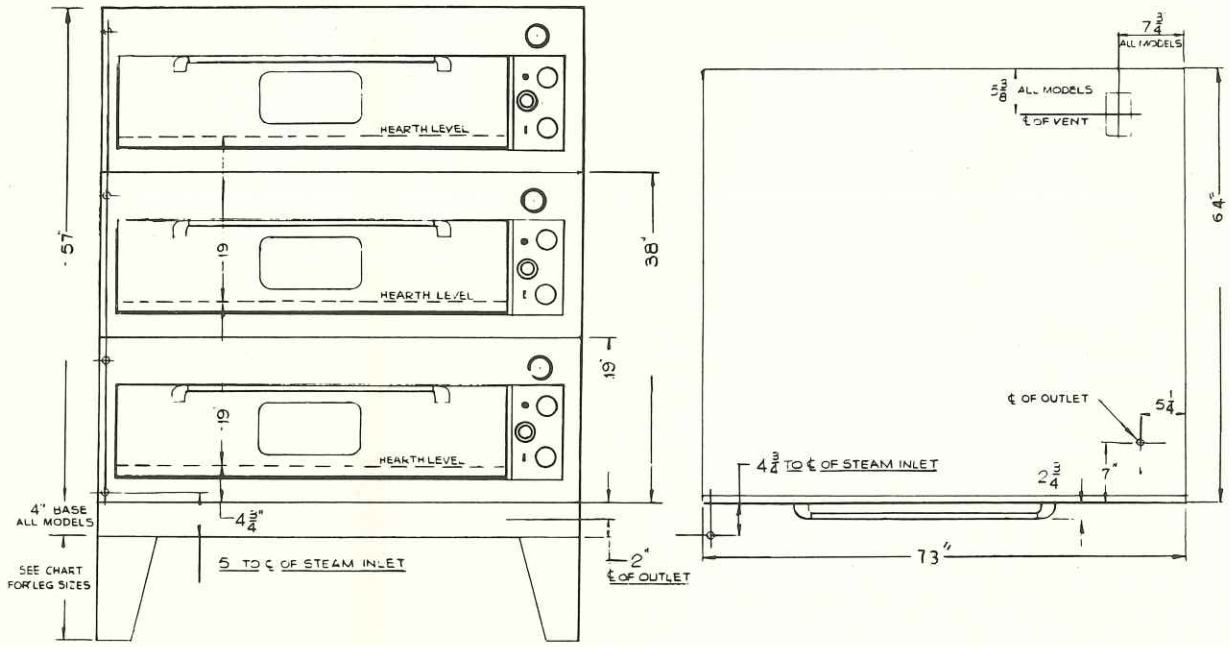

Dimensions & Weights

	INTERIOR	EXTERIOR
Wide	56″	73″
Height	8″	19″
Depth	56 1/4″	64″
		LEGS
1 Section		27″
2 Section		23″
3 Section		4″

Approx. Weight

	SHIPPING	INSTALLED
VO-007	1510	1360
VO-077	2600	2415
VO-777	3700	3300

NOTE: Legs optional. No charge. Specify when ordering.

DECK: Core plate standard. Steel optional.

STANDARD VOLTAGES — 208 VOLTS OR 240 VOLTS A. C. — SINGLE PHASE OR THREE PHASE

UNIT	TOTAL K.W. CONN.	3-PHASE LOADING KW PER PHASE		
		X-Y	Y-Z	X-Z
VO-007	10.5	4.5	6.0	—
VO-077	21.0	6.0	6.0	9.0
VO-777	31.5	10.5	10.5	10.5

NOMINAL AMPS. PER LINE WIRE

	3-Phase						1-Phase	
	208 V.			240 V.			208 V.	240 V.
	X	Y	Z	X	Y	Z		
VO-007	22	39	29	19	34	25	50.5	43.8
VO-077	62	48	62	54	43	54	101.0	87.6
VO-777	86	86	86	74	74	74	151.5	131.4

Vulcan Hart Manufacturing Co., 3600 North Point Boulevard, Baltimore 22, Maryland

LOUISVILLE • NEW YORK • CHICAGO • LOS ANGELES • SAN FRANCISCO • BOSTON

VH—216

VULCAN *Electric*

HEAVY DUTY ROAST OVENS

Model VO-888 ☐ Model VO-088 ☐ Model VO-008 ☐

MODEL VO-008 OVEN 1 SECTION — 2 PAN

MODEL VO-888 OVEN 3 SECTION — 2 PAN

MODEL VO-088 OVEN 2 SECTION — 2 PAN

SPECIFICATIONS

GENERAL: This two pan sectional roast oven is available in one, two, or three section units and may be installed with or without legs. It may be placed next to wall or any other oven or unit not operating at excessive heat temperature.

INTERIOR: Roast oven has a complete interior of vitreous enamel. Oven deck is of one piece Air-Cushion steel plate to provide even heat throughout the entire deck surface. A suitable vent is provided to carry off excess moisture during roasting. A suitable strong rack is provided which fits into channels on each side of each Roast section.

INSULATION: Entire unit, sides, back, top and bottom is insulated with a minimum of 4" spun fibre, non-sagging, vermin proof insulation. During operation it is possible to place a hand on any part of oven outer body.

OVEN DOOR: The oven door extends the full width of the oven. It has two inches of spun fibre insulation. The interior of the door is of vitreous enamel and the exterior of Stainless Steel standard finish. The oven door is capable of supporting 200 lbs. without appreciable distortion.

HEATING UNITS: Tubular type heating units are suspended under the oven deck and in the top of each oven section. These units are controlled by top and bottom 3-heat reversible switches. These provide directional heat and form a combination of 5-heat patterns. Quantity of heat is controlled by a 150° F. to 550° F. thermostat and each section has an independent pilot light.

CONTROLS: Controls are recessed in a hinged panel to right of oven doors. This panel provides access to switches, lights, wiring, fuses and oven door hinge assembly. The oven need never be moved from the installed position.

FINISH: Entire front of all sections are of Stainless Steel as standard equipment. Body sides, top and back are painted and baked on clear and durable Silvertone finish. Suitable legs are provided as indicated and are finished similar to body. Stainless Steel sides, top and back are available as an optional extra.

A 60 minute long ring timer is provided for each section.

VULCAN-HART MANUFACTURING CO.
3600 North Point Boulevard, Baltimore 22, Maryland

VULCAN

Sectional *Electric* Roast Ovens

DIMENSIONS AND ELECTRIC DATA

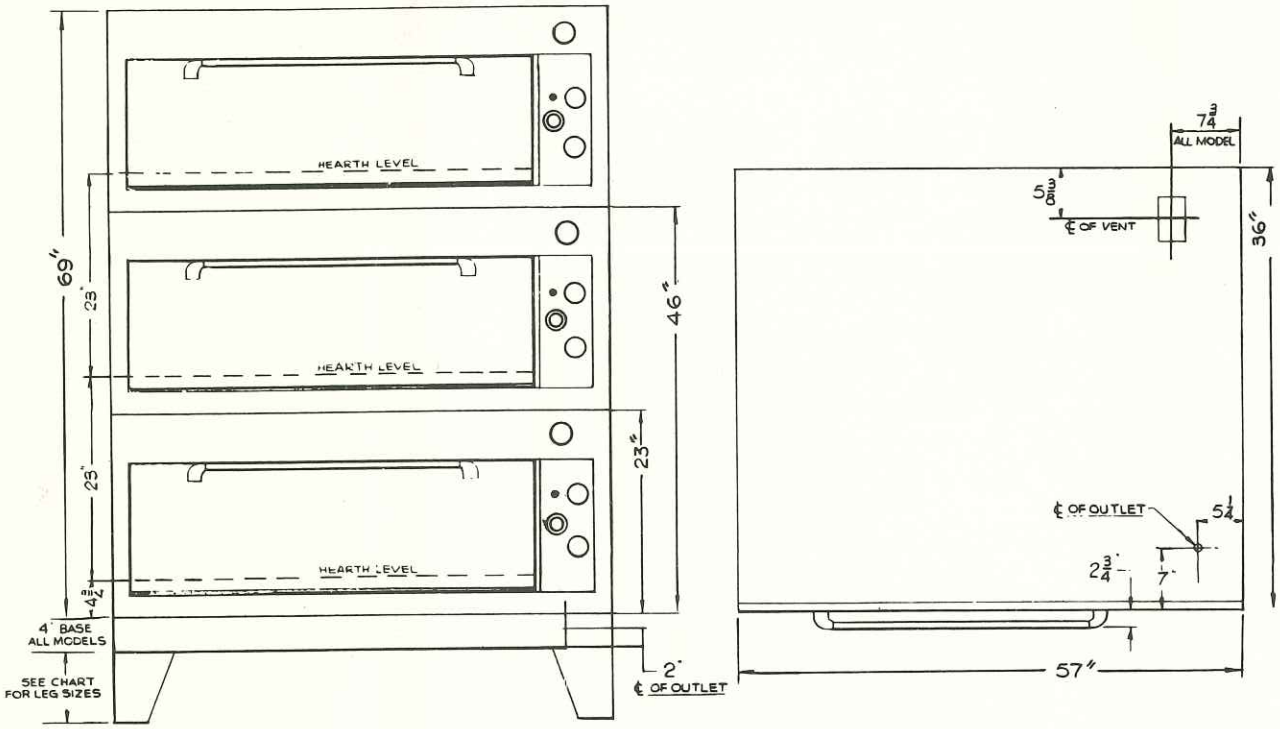

Dimensions & Weights

	INTERIOR	EXTERIOR
Wide	40"	57"
Height	12"	23"
Depth	28¼"	36"
		LEGS
1 Section		23"
2 Section		16"
3 Section		4"

Approx. Weight

	SHIPPING	INSTALLED
VO-008	780	670
VO-088	1350	1160
VO-888	1900	1640

NOTE: Legs optional. No charge. Specify when ordering.

DECK: Steel Standard
Core Plate Optional

STANDARD VOLTAGES—208 OR 240 VOLTS A.C.—SINGLE PHASE OR THREE PHASE

UNIT	TOTAL K.W. CONN.	3-PHASE LOADING KW PER PHASE		
		X-Y	Y-Z	X-Z
VO-008	6.2	2.6		3.6
VO-088	12.4	5.2	3.6	3.6
VO-888	18.6	6.2	6.2	6.2

NOMINAL AMPS. PER LINE WIRE

	3-Phase						1-Phase	
	208 V.			240 V.			208 V.	240 V.
	X	Y	Z	X	Y	Z		
VO-008	26	13	18	23	11	15	30	26
VO-088	37	37	30	32	32	26	60	52
VO-888	52	52	52	45	45	45	90	78

Vulcan Hart Manufacturing Co., 3600 North Point Boulevard, Baltimore 22, Maryland

LOUISVILLE • NEW YORK • CHICAGO • LOS ANGELES • SAN FRANCISCO • BOSTON

VH—217

VULCAN Electric

COMBINATION BAKE AND ROAST OVENS

Model VO-448 ☐ Model VO-048 ☐ Model VO-488 ☐

MODEL VO-048 COMBINATION OVEN—1 BAKE—1 ROAST SECTION

MODEL VO-488 COMBINATION OVEN—1 BAKE—2 ROAST SECTIONS

MODEL VO-448 COMBINATION OVEN—2 BAKE—1 ROAST SECTION

SPECIFICATIONS

GENERAL: These two pan ovens are available in one or more units of bake and roast sections and may be installed with or without legs. It may be placed next to a wall or any other oven or unit not operating at excessive heat temperature.

INTERIOR: Complete interior of each section of vitreous enamel finish. Oven deck in roast sections of Air-Cushion steel plate. Core Plate optional. Oven deck of bake sections of 7/8″ Core Plate. A suitable vent is provided to carry off excess moisture during baking or roasting operations. A suitable strong rack is provided, which fits into channels on each side of each roast section.

INSULATION: Entire unit, sides, back, top and bottom is insulated with a minimum of 4″ spun fibre, non-sagging, vermin proof insulation. During operation it is possible to place a hand on any part of oven outer body.

OVEN DOOR: The oven door extends the full width of the oven. It has two inches of spun fibre insulation. The interior of the door is of vitreous enamel and the exterior of stainless steel. The oven door is capable of supporting 200 lbs. without distortion. Bake oven doors have an observation window.

HEATING UNITS: Tubular type heating units are suspended under the oven deck and in the top of each oven section. These units are controlled by top and bottom 3-heat reversible switches. These provide directional heat and form a combination of 15-heat patterns. Quantity of heat is controlled by a 150° F. to 550° F. thermostat and each has an independent pilot light.

CONTROLS: Controls are recessed in a hinged panel to right of oven doors. This panel provided access to switches, lights, wiring, fuses and oven door hinge assembly. The oven need never be moved from the installed position. A 60 minute long ring timer is provided on each section. The ringing of this timer acts as a reminder to remove baked products from the oven.

FINISH: Entire front of all sections are of Stainless Steel as standard equipment. Body sides, top and back are painted and baked in clear and durable Silvertone Finish. Suitable legs are provided as indicated and are finished similar to body finish. Stainless Steel sides, top or back are available as an optional extra. The front sections of Stainless Steel are standard equipment.

Steam injectors on bake ovens optional.

VULCAN·HART MANUFACTURING CO.
3600 North Point Boulevard, Baltimore 22, Maryland

VULCAN

Electric

Combination Bake And Roast Ovens

DIMENSIONS AND ELECTRIC DATA

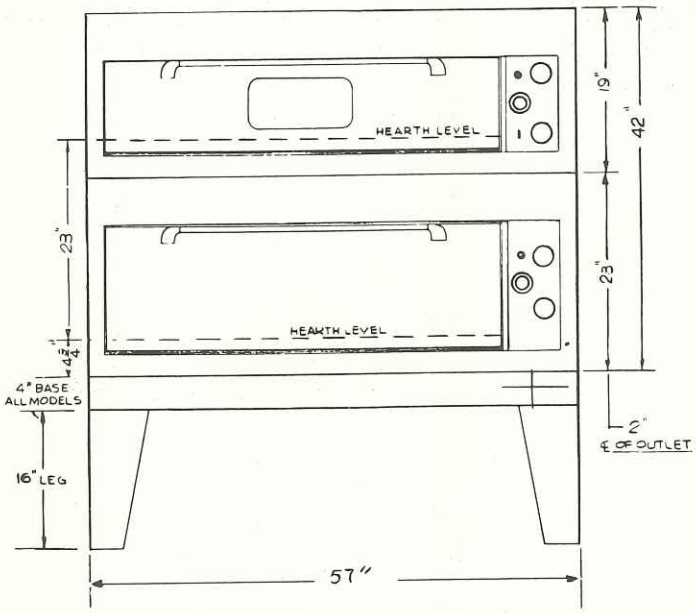

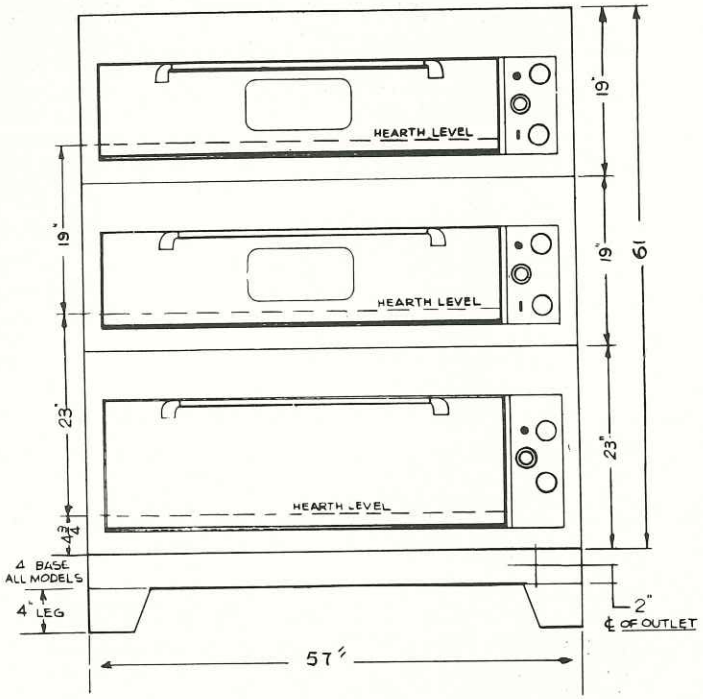

STANDARD VOLTAGES — 208 VOLTS OR 240 VOLTS A. C. — SINGLE PHASE OR THREE PHASE

Dimensions & Weights

	INTERIOR	EXTERIOR
Wide	40"	57"
Height	8"-12"	19"-23"
Depth	28¼"	36"
		LEGS
2 Sections		16"
3 Sections		4"

Approx. Weight

	SHIPPING	INSTALLED
VO-048	1325	1125
VO-448	1670	1415
VO-488	1760	1500

NOTE: Legs optional. No charge. Specify when ordering.

DECK: Bake Core Plate
Roast Steel

UNIT	TOTAL K.W. CONN.	3-PHASE LOADING KW PER PHASE		
		X-Y	Y-Z	X-Z
VO-048	12.4	5.2	3.6	3.6
VO-448	18.6	6.2	6.2	6.2
VO-488	18.6	6.2	6.2	6.2

NOMINAL AMPS. PER LINE WIRE

	3-Phase						1-Phase	
	208 V.			240 V.			208 V.	240 V.
	X	Y	Z	X	Y	Z		
VO-048	37	37	30	32	32	26	60	52
VO-448	52	52	52	45	45	45	90	78
VO-488	52	52	52	45	45	45	90	78

Vulcan Hart Manufacturing Co., 3600 North Point Boulevard, Baltimore 22, Maryland

LOUISVILLE • NEW YORK • CHICAGO • LOS ANGELES • SAN FRANCISCO • BOSTON

VULCAN Electric

Model E 260

RESTAURANT RANGES

MODEL E-260 RANGE

SPECIFICATIONS

GENERAL: The range consists of six (6) surface units; a double griddle, a double broiler, two ovens. and a backshelf. All controls are conveniently located on panels immediately under the top front of the range for easy operation. The range dimensions are 31 9/16″ deep, 35″ from range top to floor. 57⅝″ from flue top to floor and 60″ wide with a 2¾″ overhang above table level on the right side.

SURFACE UNITS: There are one 1500 watt, and one 2400 watt high speed, tubular, heating elements and four 2000 watt cast iron units mounted in substantial circular frames on the range top. Each surface unit is controlled by a five-heat (3 heats on 3 phase 3 wire) switch. A red signal light is provided to indicate if any of the surface units are on. A removable drip pan is provided underneath all tubular surface units.

GRIDDLE: The large double Griddle (24″ x 24″) is equipped with two (2) 3400 watt tubular heating elements. Each element is separately controlled by a thermostat with a range of 200°F to 450°F. A red signal light is provided to indicate if the correct temperature is being maintained. The griddle is made of one piece of steel. highly polished, and with a 7/8″ high ledge around three sides. The fourth side has a turned down drip edge, under which there is a slide-out grease container.

BROILER: The double broiler is equipped with two (2) 2400 watt tubular heating elements. Each element is separately controlled by an infinite control switch. A red signal light is provided to indicate if either broiling element is on. A heavy duty broiler grid and drip pan can be used in three different positions. A removable grease drawer is provided.

OVENS: There are two large capacity ovens, 26″W x 22½″D x 13¼″H. Each is efficiently insulated with high-grade spun fiber insulations. Two heavy wire pan racks are provided. Each oven is equipped with two (2) 2500 watt tubular heating elements under the oven deck. Each oven is equipped with an adjustable thermostat with a range of 150°F to 550°F and a red signal light to indicate if the correct temperature is being maintained.

BREAKERS, WIRING, & TERMINALS: The range is equipped with twelve (12) 30 ampere, single pole, full magnetic circuit breakers. All wire is of high grade stranded tinned copper wire with heavy impregnated asbestos insulation. All wiring connectors are the solderless pressure type. All connectors and terminals are enclosed in appropriate housings. A terminal block is provided for making line connections. 2″ and 2½″ knockouts are located on the left side and in the rear of the range to facilitate conduit connection. All servicing can be done from top or front of range.

FINISH: Surface unit panels and oven linings have a vitreous enameled finish. Front tops are made of #4 finish stainless steel. All other panels are aluminized steel or aluminized silvertone finish with a clear silicone lacquer.

MODEL E260 RANGE WITH OVEN DOORS OPEN

VULCAN

Smarter Design

Greater Flexibility

More Value

VULCAN-HART MANUFACTURING CO.
3600 North Point Boulevard, Baltimore 22, Maryland

VULCAN

RESTAURANT *Electric* RANGES

FEATURES . . .

1. 6 Hi-Heat Surface Units
2. 24″ x 24″ Griddle w/2 Thermostats 150°-450° F with Pilot Lights
3. Broiler—Effective grid area 21″ x 18″ w/2 infinite control switches
4. 2 Ovens 26″w x 22½″d x 13¼″h w/150°-550° F thermostats and pilot lights
5. Complete safety protection W/12 circuit breakers
6. Full width backguard and high shelf

BREAKER NUMBER	LOADING
1 1	3 Front surface units 2.0 KW, 1.5 KW, 2.4 KW—Total 5.9 KW
2 2	3 Back surface units 2.0 KW, 2.0 KW, 2.0 KW—Total 6.0 KW
3 3	Left Oven 5.0 KW
4 4	Right Oven 5.0 KW
5 5	Left broiler and griddle 2.4 KW & 3.4 KW—Total 5.8 KW
6 6	Right broiler and griddle 2.4 KW & 3.4 KW—Total 5.8 KW
Total Connected	33.5 KW
Total 3—Phase	X-Y—11.6 KW, Y-Z—11.0 KW, X-Z—10.9 KW

Standard Voltages	Nominal amps per line wire			
	3-Phase			1-Phase
	X	Y	Z	
115/230 or 230	84.7	84.7	82.1	145.2
120/208	93.7	93.7	90.8	160.6

Approximate Shipping Weight 875 Lbs.

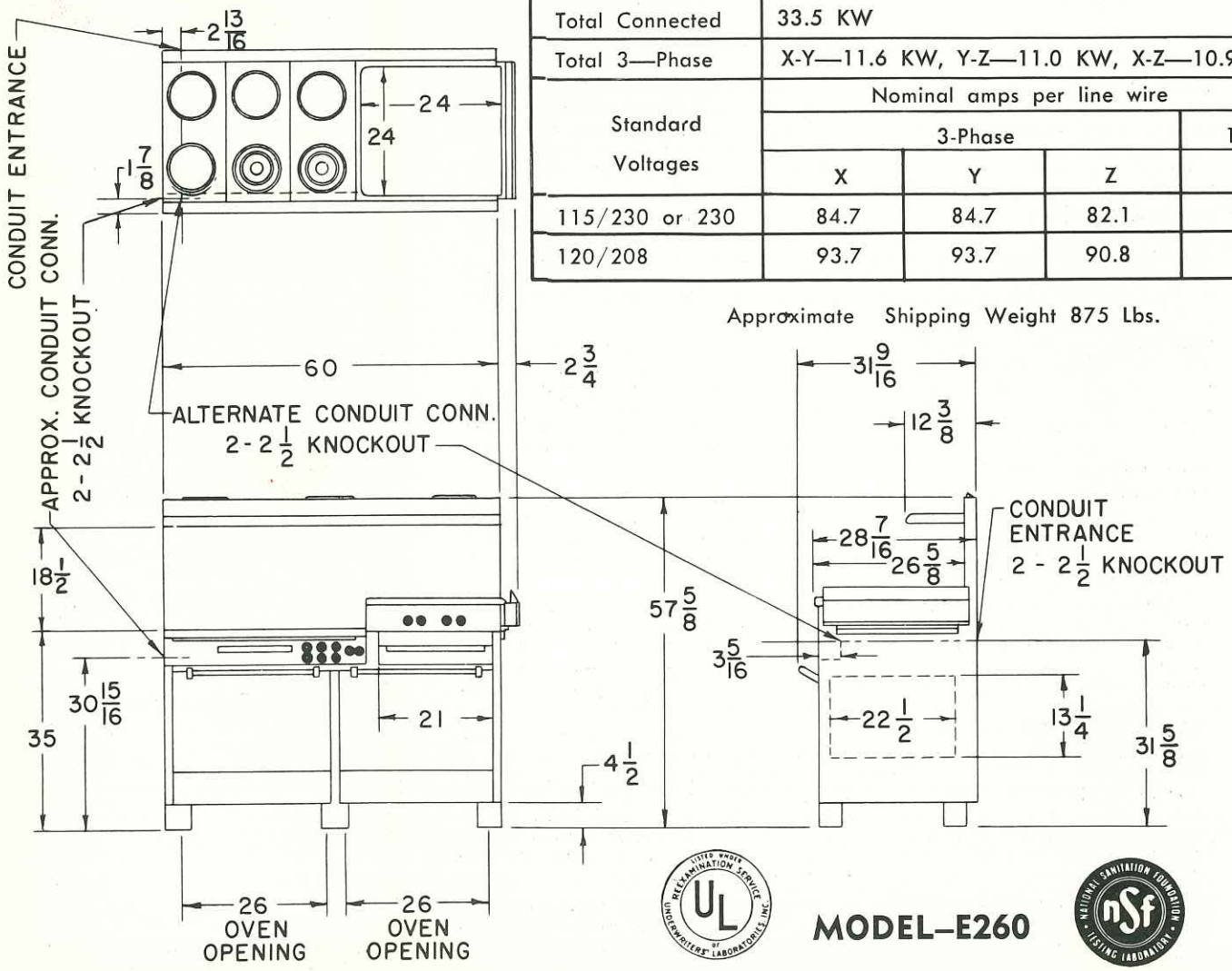

MODEL—E260

Vulcan Hart Manufacturing Co., 3600 North Point Boulevard, Baltimore 22, Maryland

LOUISVILLE • NEW YORK • CHICAGO • LOS ANGELES • SAN FRANCISCO • BOSTON

RESTAURANT RANGE
(ELECTRIC)

VULCAN

Electric

RESTAURANT RANGE

VULCAN • HART MANUFACTURING CO., Baltimore • Louisville

new

VULCAN AUTOMATIC ELECTRIC RESTAURANT RANGE

AUTOMATIC, EFFICIENT AND DEPENDABLE
CUSTOM ENGINEERED TO YOUR EXACT REQUIREMENTS

Completely automatic and with many new and exclusive features

LARGE CAPACITY OVENS

Two large 26″ x 22½″ ovens permit baking and roasting at one time. Each high speed 5000 Watt oven is controlled by a thermostat and has an individual pilot light to indicate that the correct pre-set temperature is being maintained. Ovens are insulated with vermin proof high grade non-sagging spun fiber insulation. Removable vitreous enamel oven deck for ease of cleaning. Oven interiors are vitreous enamel and have two rack guides for adjusting height of oven rack.

SURFACE COOKING

Six Hi-Heat elements provide complete flexibility. Two 8″ High Speed units for fast bulk cooking. Two 6″ High Speed units for small quantity food preparation. Two 8″ Heavy Duty solid top elements for long sustained cooking. All elements have multiple heat switches from simmer heat to full heat. Red signal light indicates if any element is turned on. Units are mounted on a heavy 14 gauge steel top with vitreous enamel finish for long life and ease of cleaning. A removable drip pan is provided under each surface unit to catch spillage and boil overs.

FLEXIBLE HEAT GRIDDLE

The large 24″ x 24″ special alloy steel griddle has two adjustable 200° to 450° thermostats. Accurate thermostatic heat may be obtained on either right or left side of griddle. Both thermostats may be set at one temperature to provide even heat on entire griddle surface. Griddle is made of highly polished steel plate with a 7/8″ raised edge on three sides. Outer edge is turned down to allow fat run off etc. into a large full length slide out grease container. Griddle has two pilot lights to indicate if griddle is at pre-set temperature.

RADIANT HEAT BROILER

The Hi-Heat broiler is equipped with two independent tubular heating elements which give true radiant broiling. Broiling section is thoroughly insulated and heat is not transmitted to griddle above the broiler. Each element has its own infinite control switch which accurately controls any desired combination of broiling heats. A red signal light indicates if either broiling element is on. The heavy duty broiling grid and drip pan can be used in three different positions. A removable grease drawer for drippings is provided.

CONSTRUCTION

The range is constructed of heavy gauge steel suitably reinforced, welded and fastened together for maximum strength and rigidity. The unit is durable and designed to give years of satisfactory service.

FINISH

The body and high shelf panel have a new Silvertone Finish which is a specially developed process for Vulcan. Front tops on cooking surface and griddle are made of gleaming stainless steel that will withstand heavy use. As an optional extra unit may be ordered with body front, sides and high shelf panel in stainless steel.

HIGH SHELF

A full width utility shelf and back splash is securely mounted on the range frame. This 9½″ wide shelf is 18½″ above the surface of the range allowing the use of pots on cooking top. It provides a convenient place for plates, utensils, etc.

ELECTRICAL

Unit available in all standard voltages (see page 4). The range is fully equipped with magnetic circuit breakers which provide complete protection. All wire is of high grade stranded copper with heavy impregnated asbestos insulation. All servicing can be done from front or top of range. It is never necessary to move range from the installed position. All controls, switches, and pilot lights are located on panels immediately under the top front of the range for easy operation.

NOW YOU CAN COOK, GRILL, BROIL,

It's New It's Modern It's *ELECTRIC*

DESIGNED FOR

SCHOOLS • RESTAURANTS • CHURCHES • COFFEE SHOPS • LODGES
CONVALESCENT HOMES • RESORTS • DIET KITCHENS • HOSPITALS
PLANT CAFETERIAS

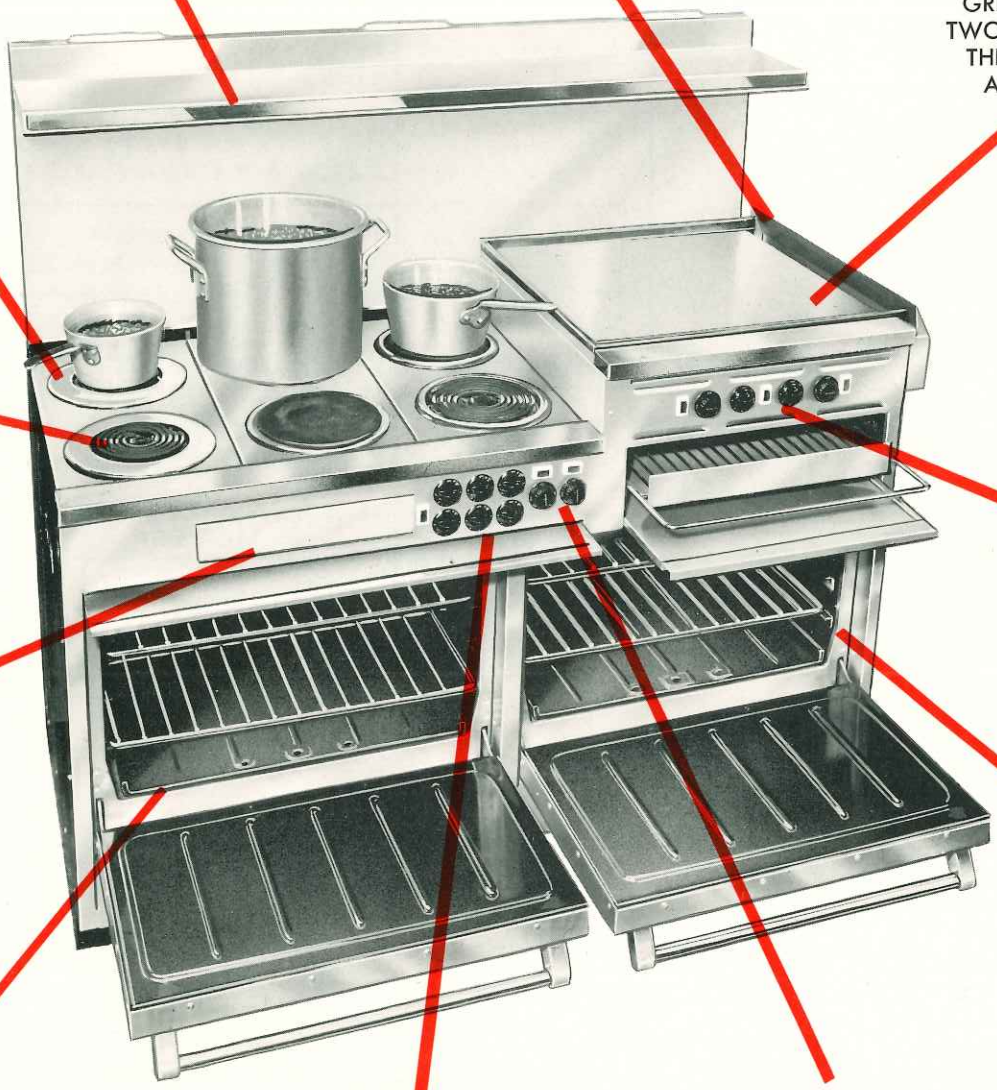

MODEL-E260

BAKE AND ROAST *ELECTRICALLY*

VULCAN Electric RESTAURANT RANGE

SPECIFICATIONS

FEATURES . . .

1. 6 Hi-Heat Surface Units
2. 24″ x 24″ Griddle w/2 Thermostats 150°-450° F with Pilot Lights
3. Broiler—Effective grid area 21″ x 18″ w/2 infinite control switches
4. 2 Ovens 26″w x 22½″d x 13¼″h w/150°-550° F thermostats and pilot lights
5. Complete safety protection W/12 circuit breakers
6. Full width backguard and high shelf

BREAKER NUMBER	LOADING
1 1	3 Front surface units 1.5 KW, 2.0 KW, 2.4 KW—Total 5.9 KW
2 2	3 Back surface units 1.5 KW, 2.0 KW, 2.4 KW—Total 5.9 KW
3 3	Left Oven 5.0 KW
4 4	Right Oven 5.0 KW
5 5	Left broiler and griddle 2.4 KW & 3.4 KW—Total 5.8 KW
6 6	Right broiler and griddle 2.4 KW & 3.4 KW—Total 5.8 KW
Total Connected	33.4 KW
Total 3—Phase	X-Y—11.6 KW, Y-Z—10.9 KW, X-Z—10.9 KW

Standard Voltages	Nominal amps per line wire			
	3-Phase			1-Phase
	X	Y	Z	
115/230 or 230	84.7	84.7	82.1	145.2
120/208	93.7	93.7	90.8	160.6

Approximately Shipping Weight 875 Lbs.

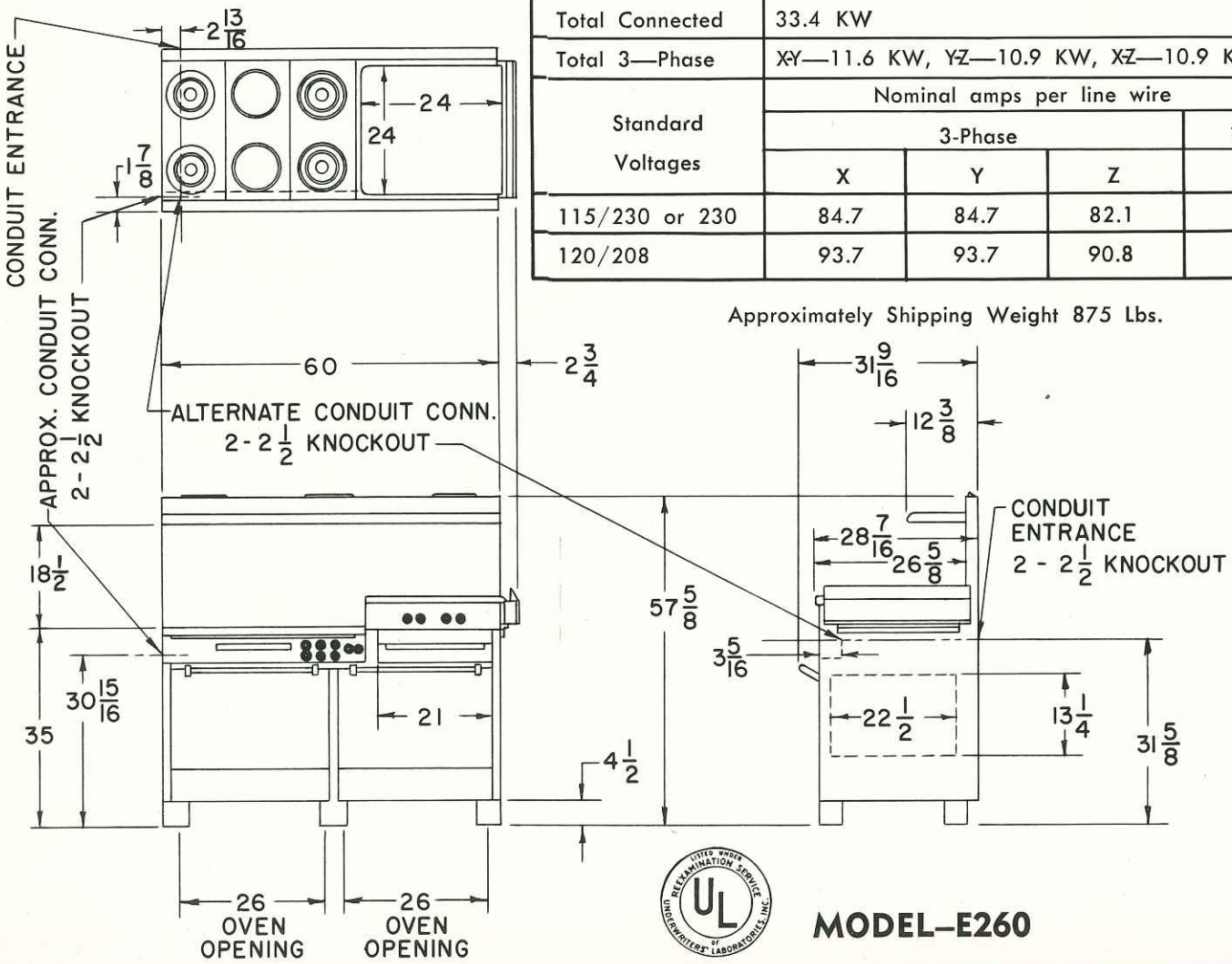

DO NOT USE FOR DETAIL DIMENSIONS
Dimensions & Arrangement subject to change without notice.
Certified print of current drawing furnished on request.

MODEL—E260

VULCAN-HART MANUFACTURING COMPANY, INCORPORATED

3600 NORTH POINT BOULEVARD, BALTIMORE 22, MARYLAND

Form No. VH-160

Litho U.S.A.

FOOD WARMERS
(ELECTRIC)

Roll and Food Warmers

by VULCAN

HART

World's Finest Commercial
Cooking Equipment

5 new Vulcan-Hart Roll and Food Warmers to choose from . . .

Here is the answer to an age old problem — that of having hot food prepared and ready to serve during the day's "rush hours" — a period when normally orders become "bogged down".

With the new Vulcan Hart Roll and Food Warmer you can prepare food hours in advance and have it remain oven fresh and ready to serve.

MODEL No. 2S

Two Drawer Models 2S and 2L

With two stainless steel drawers, the Models 2S and 2L Vulcan Hart Roll and Food Warmers are ideal for counter or table top use. They are compact, yet have the same high quality that you will find in the larger models.

Thermostatically controlled, they are equipped with a circulation and humidity control system that prevents foods from getting soggy, drying out, or shrinking.

The Vulcan Hart Roll and Food Warmer will speed service, increase turnover and save you many steps by placing it near the point of service. No drains, pipes or fuel connections are needed. Simply plug it in and it is ready for instant use.

An exclusive feature in the larger models of the Vulcan Hart Roll and Food Warmer is the large 22" x 20" drawers that will accommodate a No. 200 steam table pan.

MODEL No. 3S

Three Drawer Models 3S and 3L

The Models 3S and 3L Vulcan Hart Roll and Food Warmers are equipped with demountable legs that can be removed for most any type of installation.

Three stainless steel drawers will keep cooked foods fresh for hours. They can not dry out, shrink or get soggy in the Vulcan Hart Roll and Food Warmer. It is equipped with a circulation and humidity control system that prevents any food spoilage.

Thermostatically controlled, the Vulcan Hart Roll and Food Warmer requires no constant attention or observation—temperatures remain uniform and even.
The Vulcan Hart Roll and Food Warmer is easy to install. No expensive remodeling is needed—no drains, pipes or fuel connections. Just plug it in and it is ready for use.

An exclusive feature in the larger models of the Vulcan Hart Roll and Food Warmer is the extra large 22" x 20" drawers that accommodate a No. 200 steam table pan.

MODEL No. 4L

Four Drawer Model 4L

The Model 4L should meet most requirements. Four easy to clean stainless steel drawers with controlled air circulation permit you to store large quantities of hot food and have them remain oven fresh and ready for use hours later.

Thermostatically controlled, heat remains steady and uniform at all times. Almost any kind of food can be stored in the Vulcan Hart Roll and Food Warmer for hours and retain its natural appearance and delicious flavor.

There is no installation problems with the Vulcan Hart Roll and Food Warmer no pipes, drains or fuel connections are needed. Just plug it in and it's ready for use.

Its stainless steel construction will give you years of faithful service—service that will cut your overhead, speed your service and increase your volume.
An exclusive feature in the larger models is the extra large 22" x 20" drawers that will accommodate a No. 200 steam table pan.

Why YOU SHOULD CHOOSE VULCAN HART.....

1 WORLD'S FINEST

Vulcan Hart makes the world's finest cooking equipment. There is no equal, anywhere, at any price.

2 MADE BY SPECIALISTS

Vulcan Hart is the largest manufacturer in the United States devoted exclusively to the manufacture of commercial cooking equipment.

3 RECOMMENDED

Vulcan Hart cooking equipment is recommended by Cooks and Bakers everywhere.

4 TESTED EFFICIENCY AND DESIGN

Vulcan Hart engineers are constantly seeking to improve the efficiency and design of Vulcan Hart equipment. New ideas and techniques are tested daily to make Vulcan Hart the greatest name in commercial cooking equipment.

5 OLDEST NAME IN COMMERCIAL COOKING

Since 1890 Vulcan equipment has been the choice of discriminating users everywhere.

SERVE THEM HOT AND OVEN FRESH

HOT ROLLS
Muffins
Biscuits
Doughnuts
Ginger bread
and many other
kinds of hot breads

DELICIOUS MEATS
Sausage
Ham
Roast
Bacon
Fried Chicken
Corned Beef Hash
Hamburger
and many other
kinds of meat dishes,
eggs or fish

COOKED VEGETABLES
Carrots
Potatoes
Peas
Beets
Spinach
and many kinds of
hot salads

HOT PIES and DESSERT
Apple Pie
Pumpkin Pie
Baked Apples
Puddings
Cobblers
and many kinds of
hot pastry

VULCAN-HART Mobile ROLL AND FOOD WARMER

Ideal for hospitals, institutions, etc the VULCAN-HART Mobile Roll and Food Warmers are especially equipped with bumpers and handle bars — easy quiet movement is assured from rubber tired casters. Unit plugs into electrical outlet and foods become piping hot and ready to serve. Available with 3-drawers, Model 3LC or 4-drawers, Model 4LC.

OVERALL SPECIFICATIONS

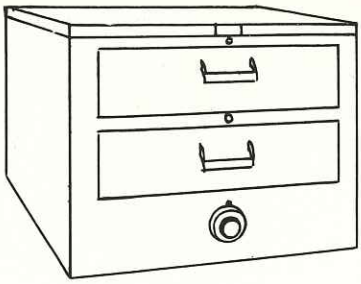

MODEL 2L SPECIFICATIONS

Overall Size	29½" wide	27" deep	22½" high
Drawer Size	22" wide	20" deep	4⅝" high
Roll Capacity	16 Dozen	Rolls Per Hour	48 Dozen
Rating in Watts—800		Shipping Weight 245 lbs.	

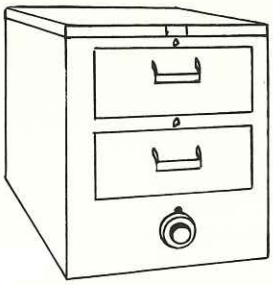

MODEL 2S SPECIFICATIONS

Overall Size	23" wide	23" deep	22½" high
Drawer Size	15½" wide	16" deep	4⅝" high
Roll Capacity	12 Dozen	Rolls Per Hour	36 Dozen
Rating in Watts—800		Shipping Weight 190 lbs.	

MODEL 3L SPECIFICATIONS

Overall Size	29½" wide	27" deep	44" high
Cabinet Size	29½" wide	27" deep	29⅞" high
Drawer Size	22" wide	20" deep	4⅝" high
Leg Height—14¾"			
Roll Capacity	24 Dozen	Rolls Per Hour	72 Dozen
Rating in Watts—1000		Shipping Weight 340 lbs.	

Mobile Unit Model 3LC—

MODEL 3S SPECIFICATIONS

Overall Size	23" wide	23" deep	44" high
Cabinet Size	23" wide	23" deep	29⅞" high
Drawer Size	15½" wide	16" deep	4⅝" high
Leg Height—14¾"			
Roll Capacity	18 Dozen	Rolls Per Hour	54 Dozen
Rating in Watts—1000		Shipping Weight 300 lbs.	

MODEL 4L SPECIFICATIONS

Overall Size	29½" wide	27" deep	44" high
Cabinet Size	29½" wide	27" deep	37¼" high
Drawer Size	22" wide	20" deep	4⅝" high
Leg Height—7"			
Roll Capacity	32 Dozen	Rolls Per Hour	96 Dozen
Rating in Watts—1200		Shipping Weight 410 lbs.	

Mobile Unit Model 4LC—

GENERAL SPECIFICATIONS

- Thermostatically controlled
- Individual humidity and circulation control
- Double Front Construction
- Demountable Legs
- Life lasting, easy to clean stainless steel
- Complete with cord
- Fully Guaranteed
- U. L. Approved

VH-112 LITHO IN U.S.A.

COUNTER EQUIPMENT
(ELECTRIC)

VULCAN·HART

Selectromatic

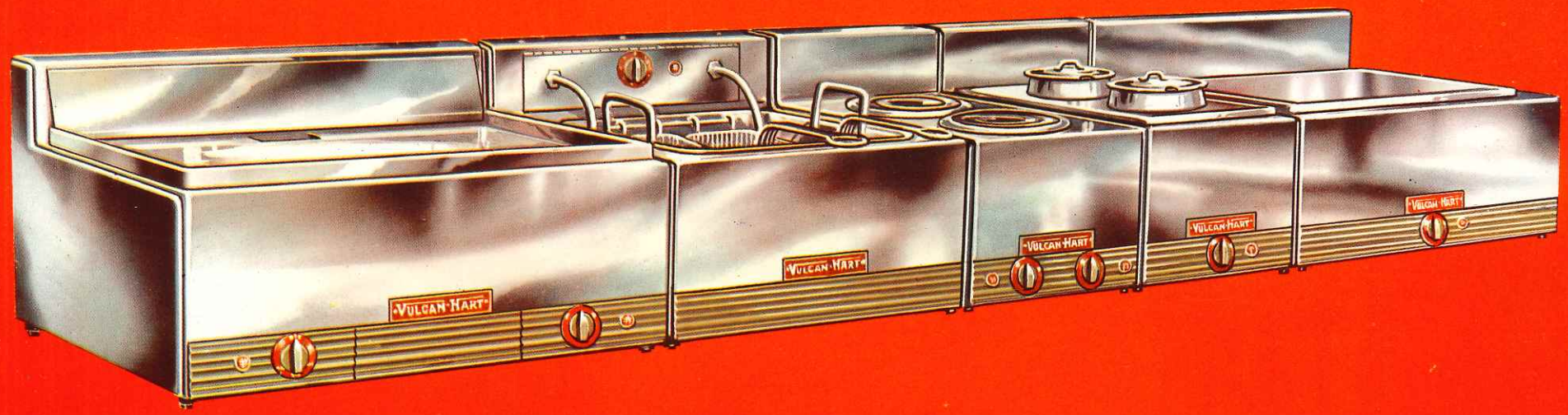

ELECTRIC COUNTER EQUIPMENT

NEW *Selectromatic*

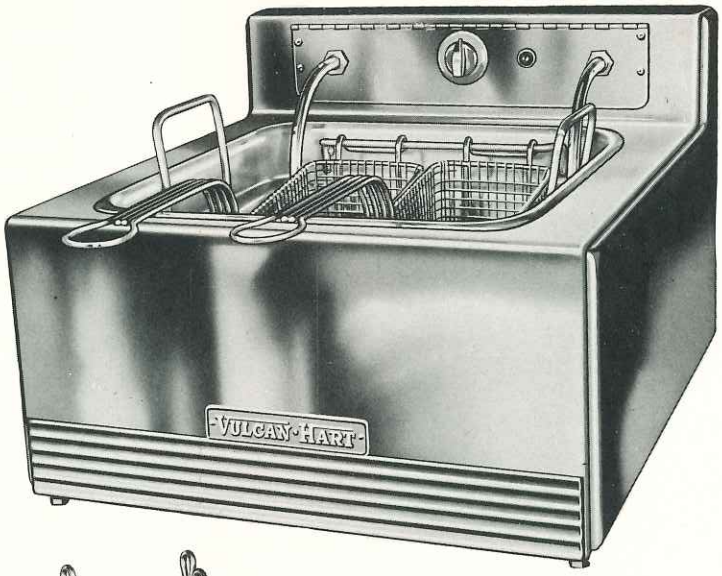

VULCAN·HART *Selectromatic* DEEP FAT FRYER

GREATER FRYING PERFORMANCE— LESS FAT CONSUMPTION

The new VULCAN-HART Electric Deep Fat Fryer is the latest in design, performance and quality. With less fat consumption the VULCAN-HART Electric Deep Fat Fryer will turn out 100 pounds of french fries browned in one hour, 29 pounds per hour blanched or 22 pounds per hour completely fried — will actually pay for itself many times over in fast, efficient operation. Beautiful chrome finish with gold and red trim.

Thermostatically Controlled
U. L. Approved

"LIFT-UP" HEATING UNIT

The close-coupled wiring of the "Lift-up" Heating Unit is completely protected from grease. When fry kettle is removed there are no wires exposed to spilled grease. Heating Unit swings up and locks into position.

STAINLESS STEEL FRY COMPARTMENT

Fry kettle is of stainless steel (also available at lower price in heavily plated steel). Heavy plated baskets available in twin or single sizes.

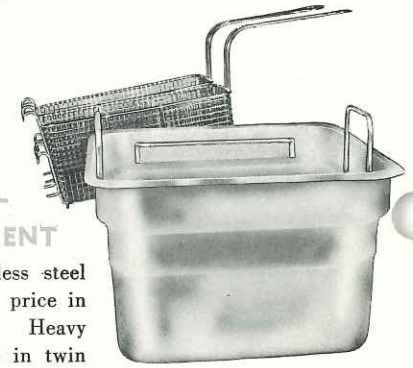

VULCAN·HART *Selectromatic* HOTPLATE

The new VULCAN-HART Electric Hotplate is ideal for a multitude of cooking operations. High speed one coil "Monotube" Heating Unit lifts up for easy cleaning of reflector pan and has three heat switch—low, medium, high; remains flat without warping.

MONOTUBE UNIT

Sturdy and durable, the "Monotube" Heating Unit is built for years of perfect service. Its fast heating characteristic makes it the most desired heating unit available.

SIGNAL LIGHT

Long life "Neon Glow" signal light indicates when unit is in operation.

New, beautiful chrome finish with gold and red trim.

ELECTRIC COUNTER EQUIPMENT

VULCAN·HART *Selectromatic* GRIDDLES

NEW ONE-PIECE STEEL GRIDDLE PLATE

Complete uniformity of heat distribution, makes the new VULCAN-HART Electric Griddles ideal for all griddle work. Its highly polished, one piece steel griddle plate has 7/8" high ledge; grease chute is fully enclosed to "slide out" grease drawer. Splasher back easily removed for cleaning. Thermostatic control assures proper heat at all times. Two heat controls on 24" and 36" models allow independent heat for each half of griddle plate. Available in three sizes.

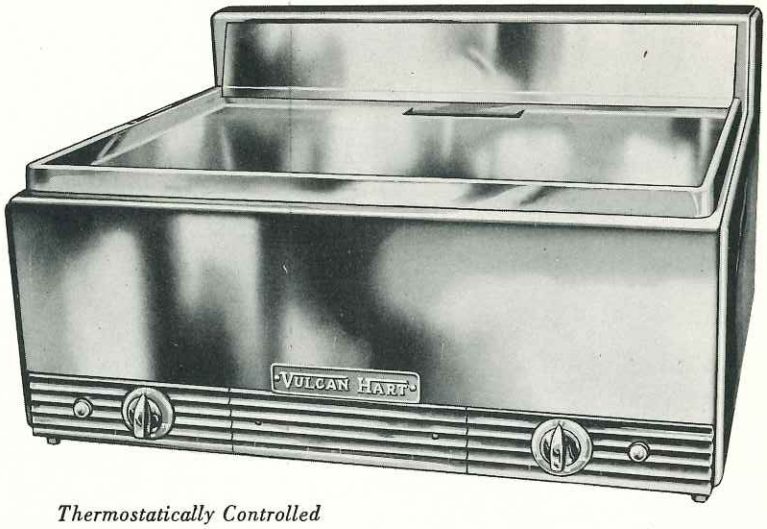

Thermostatically Controlled
U. L. Approved

NEW CONCEALED GREASE TRAY

No bulky trays, knobs or hangers on the new VULCAN-HART Electric Griddles—grease drawer slides snugly into place—is out of sight and out of the way.

3 SIZES TO MEET EVERY REQUIREMENT

Available in 18", 24" and 36" widths the new VULCAN-HART Electric Griddle meets the needs of all operations—large or small.

VULCAN·HART *Selectromatic* FOOD WARMERS

KEEPS FOODS AT RIGHT TEMPERATURE AND FRESHNESS

With adapter top-plates the VULCAN-HART Electric Food Warmers can be used in hundreds of possible top combinations. Model EW-24 accommodates a standard No. 200-pan. Model EW-12 takes No. 165 pan. Both units can be arranged with jar or pan combinations to meet every need.

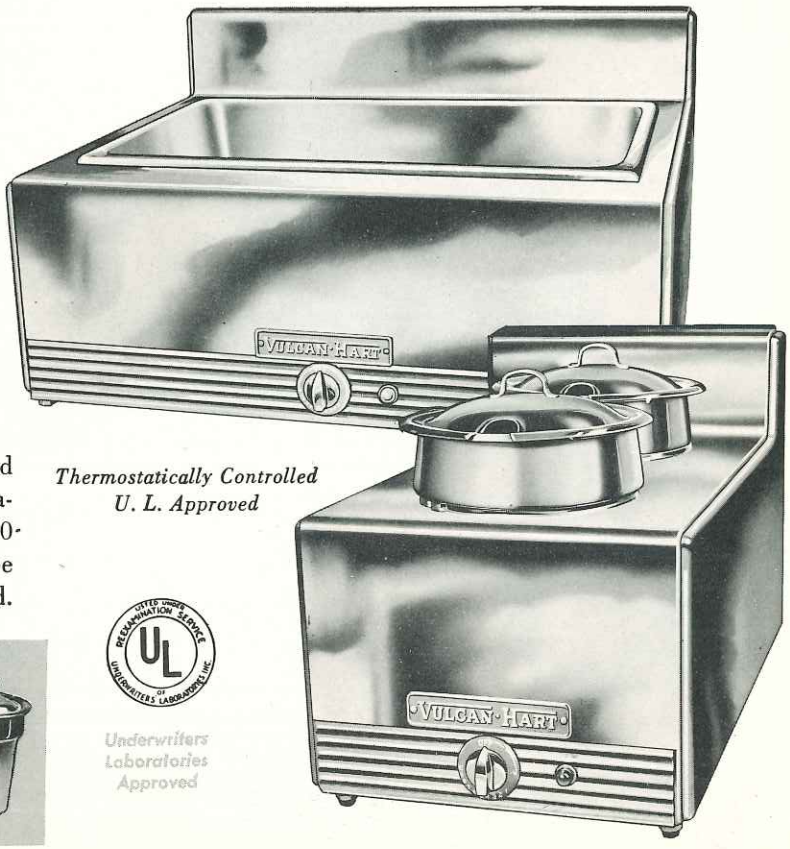

Thermostatically Controlled
U. L. Approved

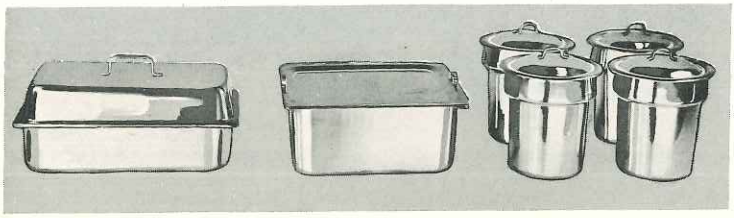

Underwriters Laboratories Approved

VULCAN·HART

Selectromatic

ELECTRIC COUNTER EQUIPMENT

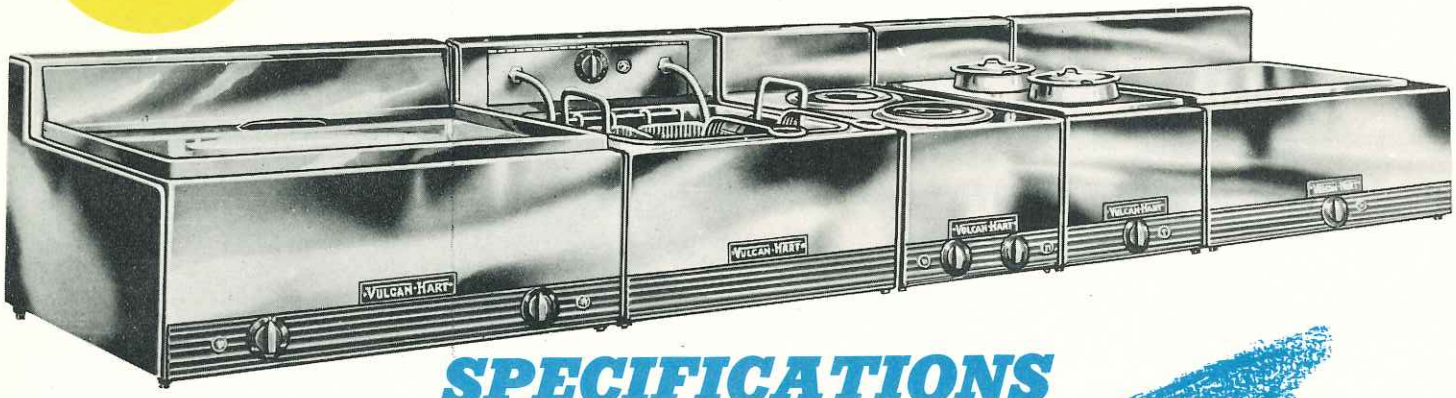

SPECIFICATIONS

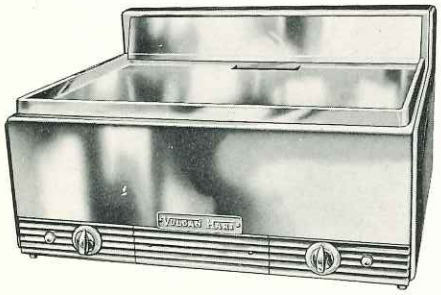

ELECTRIC GRIDDLES

MODEL NO.	EG-18	EG-24	EG-36
Overall Width	18"	23¼"	36"
Overall Depth	20"	20"	20"
Overall Height	12 3/8"	12 3/8"	12 3/8"
Time to preheat to 400 degrees, minutes	9	9	9
Input to maintain 400 degrees, watts	705	810	1150
Rated Wattage	4 kw	5.6 kw	8.6 kw
Rated Voltage	208 or 230	208 or 230	208 or 230
Griddle Size	15 3/4" x 16 3/16"	15 3/4" x 21 7/16"	15 3/4" x 34 3/16"
Net Weight, lbs.	61	80	112
Shipping Weight	70	90	131
No. of Thermostats	1	2	2

ELECTRIC FOOD WARMERS

MODEL NO.	EW 12	EW 24
Overall Width	12"	23¼"
Overall Depth	20"	20"
Overall Height	12⅜"	12⅜"
Time to preheat to high, minutes	9	9
Input to maintain high, watts	205	335
Rated Wattage	.8 kw	1.65 kw
Rated Voltage	208 or 230	208 or 230
No. of Thermostats	1	1
Net Weight, lbs.	19½	29½
Shipping Weight	26	40

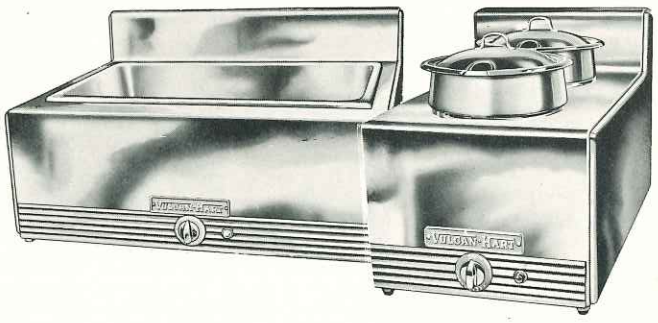

ELECTRIC DEEP FAT FRYER

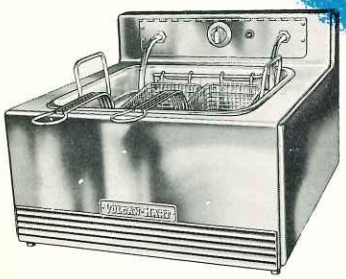

MODEL NO.	EF 18
Overall size	18" x 20" x 12 3/8"
Fry Kettle	13 3/4" x 12 5/8" x 8 1/6"
Fat Capacity, lbs.	15
Time to preheat to 350 degrees, minutes	7½
Input to maintain 350 degrees, watts	475
Rated Wattage	5 kw
Rated Voltage	208 or 230
Net Weight, lbs.	35 1/2
Shipping Weight	46
Fry Baskets	Twin Std. Single Available

ELECTRIC HOT PLATE

MODEL NO.	EH 12
Overall size	12" x 20" x 12 3/8"
Diameter of heating unit	6"
Rated Wattage	2.5 kw
Rated Voltage	208 or 230
Switch Type	3 Heat
Net Weight, lbs.	18½
Shipping Weight	25

VULCAN·HART MANUFACTURING CO.

3600 NORTH POINT BLVD., BALTIMORE 22, MARYLAND

2006 NORTHWESTERN PKWY., LOUISVILLE 3, KENTUCKY

VH-129

Litho in U.S.A.

VULCAN

PRICE SHEET NO.1959A333X5

Terms: F.O.B. Baltimore, Md., 1% Ten Days, Net 30.

HEAVY DUTY GAS COOKING EQUIPMENT

HEAVY DUTY RANGES-6700 SERIES

DESCRIPTION	Ship. Wt. Lbs.	Model No.	Standard Black Vulcadur	STAINLESS EXTERIORS Front Only	Front & One Side	Front & Both Sides	Add For Polished Back	Sterling Stainless Steel–Inside & Outside	Add For Ni-Resist Tops
HEAVY DUTY RANGES – 34" wide x 41¼" deep – with ovens									
Super Radial Fin Top	665	6730A	$ 486.00	$ 555.00	$ 588.00	$ 624.00	$ 75.00	$ 810.00	$ 75.00
Hot Top	660	6751A	468.00	537.00	570.00	606.00	75.00	783.00	60.00
Open Top	520	6745A	432.00	501.00	534.00	570.00	75.00	738.00	–
Fry Top*	700	6760A	543.00	612.00	645.00	681.00	75.00	949.00	99.00
Even Heat Top	600	6772A	534.00	603.00	636.00	672.00	75.00	881.00	69.00
Open Top/Even Heat Top	560	6772-45A	591.00	660.00	693.00	729.00	75.00	939.00	36.00
Fry Top/Open Top Combination	610	6760-45A	591.00	660.00	693.00	729.00	75.00	939.00	51.00
ADD for Closure Plates (between Flue & Floor)			18.00					27.00	
ADD for extra oven shelves (ea.)			7.50	7.50	7.50	7.50	7.50	7.50	
**ADD For Top Thermostatic Control Fry Top $150.00 on All Models.*									
SPREADER PLATES – 41¼" deep									
8½" wide	60	608	$ 36.00	$ 39.00				$ 60.00	
17" wide	120	617	60.00	63.00				104.00	
17" wide with door	130	617D	72.00	96.00				135.00	
34" wide	180	634	96.00	102.00				165.00	
34" wide with door	200	634D	111.00	159.00				222.00	
17" wide end unit with door	180	E617D	99.00	123.00	$ 156.00	$ 192.00	$ 30.00	261.00	
34" wide end unit with door	250	E634D	153.00	198.00	231.00	267.00	39.00	360.00	
EXPANDO UNITS – 41¼" deep									
17" Fry Top	285	660	$ 192.00	$ 237.00	$ 270.00	$ 306.00	$ 39.00	$ 357.00	$ 51.00
17" Open Top	200	645	123.00	189.00	222.00	258.00	39.00	309.00	–
17" Even Heat Top	260	672	192.00	255.00	288.00	324.00	39.00	375.00	36.00
25½" Broiler–Griddle	480	665	240.00	300.00	333.00	369.00	54.00	426.00	78.00
ADD for Closure Plates (Between Flue and Floor)			18.00					27.00	
DEEP FAT FRYERS – 41¼" deep									
17" wide w/100% safety shut-off	225	6794A	$ 309.00	$ 342.00	$ 375.00	$ 411.00	$ 39.00	$ 456.00	
ADD for Stainless steel tank			75.00	75.00	75.00	75.00		75.00	
ADD for Stainless steel tank cover			15.00	15.00	15.00	15.00		15.00	
ADD for Extra Pair Twin Baskets			18.00	18.00	18.00	18.00		18.00	
ADD for Large Single Basket			12.00	12.00	12.00	12.00		12.00	
25½" wide w/100% safety shut-off		6795A	405.00	471.00	504.00	540.00	45.00	594.00	
ADD for Stainless steel tank	300		102.00	102.00	102.00	102.00		102.00	
ADD for Stainless steel tank cover			21.00	21.00	21.00	21.00		21.00	
ADD for Extra Pair Twin Basket			24.00	24.00	24.00	24.00		24.00	
ADD for Large Single Basket			15.00	15.00	15.00	15.00		15.00	
Mild Steel Drain Pan for either model			21.00	21.00	21.00	21.00		21.00	
Stainless Steel Drain Pan for either model			39.00	39.00	38.00	39.00		39.00	
TABLE MODELS — NO OVENS – 34" wide x 41¼" deep									
Super Radial Fin Top	375	0730	$ 225.00	$ 246.00	$ 270.00	$ 291.00	$ 33.00	$ 354.00	$ 75.00
Hot Top	360	0751	210.00	231.00	255.00	276.00	33.00	336.00	60.00
Open Top	250	0745	171.00	192.00	216.00	237.00	33.00	297.00	
Fry Top	425	0760	270.00	291.00	305.00	326.00	33.00	402.00	99.00
Even Heat Top	375	0772	183.00	204.00	228.00	249.00	33.00	309.00	69.00
Combination-Even Heat and Open Burner Top	360	0773	183.00	204.00	228.00	249.00	33.00	309.00	36.00
Fry Top/Open Top Combination	375	0774	258.00	279.00	303.00	324.00	33.00	384.00	51.00
TABLE MODELS — NO OVENS – 42¼" deep – 17" wide									
Open Top	150	0645	$ 117.00	$ 129.00	$ 153.00	$ 174.00	$ 18.00	$ 216.00	
Even Heat Top	200	0672	174.00	186.00	210.00	231.00	18.00	273.00	$ 36.00
Fry Top	250	0660	174.00	186.00	210.00	231.00	18.00	279.00	51.00
STANDS – with adjustable legs, for the above units:									
17" wide for 17" unit		0017	$ 36.00	$ 69.00	Chrome Plated				
34" wide for 34" unit		0034	36.00	78.00					
51" wide for 1-17" & 1-34" units		0051	45.00	87.00					
68" wide for 2-34" units		0068	51.00	90.00					

VULCAN HART CORPORATION ♦ 3600 NORTH POINT BOULEVARD ♦ BALTIMORE 22, MARYLAND

VULCAN

HEAVY DUTY GAS COOKING EQUIPMENT

HEAVY DUTY RANGES-6100 SERIES

DESCRIPTION	Ship. Wt. Lbs.	Model No.	Standard Black Vulcadur	STAINLESS EXTERIORS Front Only	Front & One Side	Front & Both Sides	Add For Polished Back	Sterling Stainless Steel—Inside & Outside	Add For Ni-Resist Top
HEAVY DUTY RANGES – 34" wide x 35-3/8" deep – with ovens									
Super Radial Fin Top	650	6130 A	$ 447.00	$ 516.00	$ 549.00	$ 585.00	$ 75.00	$ 744.00	$ 75.00
Hot Top	640	6151A	423.00	492.00	525.00	561.00	75.00	720.00	60.00
Open Top	500	6145A	399.00	468.00	501.00	537.00	75.00	678.00	–
Fry Top*	655	6160A	525.00	594.00	627.00	673.00	75.00	816.00	99.00
Even Heat Top	600	6172A	504.00	573.00	606.00	642.00	75.00	816.00	69.00
Open Top/Even Heat Top	560	6172-45A	561.00	630.00	663.00	699.00	75.00	906.00	36.00
*Fry Top/Open Top Combination	550	6160-45A	561.00	630.00	663.00	699.00	75.00	906.00	51.00
ADD for extra oven shelves (ea.)			7.50	7.50	7.50	7.50	7.50	7.50	

**ADD for Top Thermostatic Control Fry Top $150.00 on All Models.*

SPREADER PLATES – 35-3/8" deep									
8½" wide	55	308	$ 36.00	$ 39.00				$ 60.00	
17" wide	115	317	60.00	63.00				104.00	
17" wide with door	125	317D	72.00	96.00				135.00	
34" wide	175	334	96.00	102.00				165.00	
34" wide with door	190	334D	111.00	159.00				222.00	
17" wide end unit with door	175	E317D	99.00	123.00	$ 156.00	$ 192.00	$ 30.00	261.00	
34" wide end unit with door	225	E334D	153.00	198.00	231.00	267.00	39.00	360.00	
EXPANDO UNITS – 35-3/8" deep									
17" Fry Top	250	360	$ 189.00	$ 234.00	$ 267.00	$ 303.00	$ 39.00	$ 351.00	$ 51.00
17" Open Top	175	345	120.00	186.00	219.00	255.00	39.00	306.00	–
17" Even Heat Top	240	372	189.00	252.00	285.00	321.00	39.00	372.00	36.00
25½" Broiler-Griddle	455	365	237.00			411.00		423.00	78.00
DEEP FAT FRYERS – 35-3/8" deep									
17" wide w/100% safety shut-off		6194A	$ 300.00	$ 333.00	$ 366.00	$ 402.00	$ 39.00	$ 447.00	–
ADD for Stainless steel tank	200		75.00	75.00	75.00	75.00		75.00	
ADD for Stainless steel tank cover			15.00	15.00	15.00	15.00		15.00	
ADD for Extra Pair Twin Baskets			18.00	18.00	18.00	18.00		18.00	
ADD for Large Single Basket			12.00	12.00	12.00	12.00		12.00	
25½" wide w/100% safety shut-off		6195A	396.00	456.00	489.00	525.00	45.00	579.00	–
ADD for Stainless steel tank	275		102.00	102.00	102.00	102.00		102.00	
ADD for Stainless steel tank cover			21.00	21.00	21.00	21.00		21.00	
ADD for Extra Pair Twin Baskets			24.00	24.00	24.00	24.00		24.00	
ADD for Large Single Basket			15.00	15.00	15.00	15.00		15.00	
Mild Steel Drain Pan for either model			21.00	21.00	21.00	21.00		21.00	
Stainless Steel Drain Pan for either model			39.00	39.00	39.00	39.00		39.00	
TABLE MODELS – NO OVENS – 34" wide x 35-3/8" deep									
Super Radial Fin Top	360	0130	$ 216.00	$ 234.00	$ 258.00	$ 279.00	$ 33.00	$ 339.00	$ 75.00
Hot Top	345	0150	198.00	216.00	240.00	261.00	33.00	324.00	60.00
Open Top	235	0145	159.00	177.00	201.00	222.00	33.00	282.00	–
Fry Top	410	0160	255.00	273.00	297.00	308.00	33.00	387.00	99.00
Even Heat Top	360	0172	171.00	189.00	213.00	234.00	33.00	296.00	–
Combination—Even Heat and Open Burner Top	345	0173	171.00	189.00	213.00	234.00	33.00	296.00	36.00
Fry Top/Open Top Combination	360	0174	246.00	264.00	288.00	309.00	33.00	372.00	51.00
TABLE MODELS – NO OVENS – 35-3/8" deep – 17" wide									
Open Top	135	0345	$ 111.00	$ 120.00	$ 144.00	$ 165.00	$ 18.00	$ 210.00	–
Even Heat Top	185	0372	162.00	171.00	195.00	216.00	18.00	264.00	$ 36.00
Fry Top	235	0360	180.00	189.00	213.00	237.00	18.00	285.00	51.00
STANDS – with adjustable legs, for the above units:									
17" wide for 17" unit		0017	$ 36.00	$ 69.00	Chrome Plated				
34" wide for 34" unit		0034	36.00	78.00					
51" wide for 1-17" & 1-34" units		0051	45.00	87.00					
68" wide for 2-34" units		0068	51.00	90.00					

VULCAN HART CORPORATION • 3600 NORTH POINT BOULEVARD • BALTIMORE 22, MARYLAND

VULCAN

HEAVY DUTY GAS COOKING EQUIPMENT

DESCRIPTION		Ship. Wt. Lbs.	Model No.	Standard Black Vulcadur	STAINLESS EXTERIORS Front Only	Front & One Side	Front & Both Sides	Add For Polished Back	Sterling Stainless Steel—Inside & Outside
SINGLE DECK HIGH SHELVES									
17"	Wide	65	6780SD	$ 42.00			$ 96.00	$ 18.00	$ 114.00
25½"	"	70	6781SD	45.00			111.00	21.00	132.00
34"	"	80	6782SD	48.00			114.00	24.00	138.00
42½"	"	95	6783SD	57.00			126.00	39.00	165.00
51"	"	115	6784SD	60.00			139.00	42.00	181.00
59½"	"	120	6785SD	69.00			150.00	45.00	195.00
68"	"	125	6786SD	72.00			189.00	48.00	237.00
Special:									
36" or less				90.00			222.00		243.00
Each additional inch				1.80			4.80		5.10
DOUBLE DECK HIGH SHELVES									
17"	Wide	50	6780DD	$ 48.00			$ 111.00	$ 18.00	$ 129.00
25½"	"	80	6781DD	54.00			123.00	21.00	144.00
34"	"	110	6782DD	57.00			126.00	24.00	150.00
42½"	"	115	6783DD	63.00			132.00	39.00	171.00
51"	"	125	6784DD	72.00			171.00	42.00	213.00
59½"	"	130	6785DD	81.00			186.00	45.00	231.00
68"	"	140	6786DD	87.00			207.00	48.00	255.00
Special:									
36" or less				105.00			261.00		288.00
Each additional inch				1.95			5.40		6.00
DUPLEX HIGH SHELVES – (for back to back) (for 41¼" deep equipment only)									
17"	Wide	70	6780DU	$ 99.00					$ 195.00
25½"	"	90	6781DU	108.00					195.00
34"	"	120	6782DU	117.00					195.00
42½"	"	140	6783DU	132.00					284.00
51"	"	145	6784DU	147.00					284.00
59½"	"	155	6785DU	156.00					284.00
68"	"	165	6786DU	165.00					284.00
Extra for cutting center flue ris er opening				30.00					33.00
BACKGUARDS – 17" Backguard or flue riser for both 41-1/4" and 35-3/8" equipment									
17"	Wide	25	6780BG	$ 13.50			$ 24.00		$ 33.00
25½"	"	30	6781BG	13.50			27.00		39.00
34"	"	40	6782BG	13.50			30.00		48.00
42½"	"	45	6783BG	15.00			30.00		51.00
51"	"	50	6784BG	15.00			36.00		63.00
59½"	"	65	6785BG	18.00			39.00		72.00
68"	"	75	6786BG	18.00			45.00		81.00
LEGS and TOE BASES									
3"–4" ADJ Sanitary Legs		10	(set of 4)	$ 9.00		$15.00 Chrome Plated			
4"–6" ADJ Sanitary Legs		12	(set of 4)	12.00		$21.00 Chrome Plated			
2-3/8" toe base 17" units		12		9.00					$ 21.00
2-3/8" toe base 25½"	"	14		9.00					21.00
2-3/8" toe base 34"	"	16		9.00					21.00

VULCAN HART CORPORATION ♦ 3600 NORTH POINT BOULEVARD ♦ BALTIMORE 22, MARYLAND

VULCAN

HEAVY DUTY GAS COOKING EQUIPMENT

DESCRIPTION	Ship. Wt. Lbs.	Model No.	Standard Black Vulcadur	STAINLESS EXTERIORS Front Only	Front & One Side	Front & Both Sides	Add For Polished Back	Sterling Stainless Steel—Inside & Outside	Add For Ni-Resist Tops
SECRET FLUES – 41¼" equipment only									
8-½" Wide			$ 6.00					$ 12.00	
17" "			7.50					15.00	
25½" "			7.50					15.00	
34" "			9.00					18.00	
FLUE RISERS – 41¼" equipment only									
8¾" x 8⅜"		R-61	$ 36.00					$ 87.00	
8¾" x 17"		R-62	36.00					126.00	
5¾" x 12"		R-63	36.00					87.00	
7" x 7"		R-64	54.00					99.00	
2" x 30"		R-65	48.00					104.00	
7" x 14"		R-66	60.00					126.00	
7" x 14"		R-67	69.00					132.00	
14" x 14"		R-68	69.00					165.00	
BROILERS									
Elevated – (Salamander)	220	6708	$ 198.00			$ 345.00	$ 33.00	$ 378.00	
Single Deck – 3" legs	245	6708SDL	189.00			339.00	33.00	372.00	
Single Deck – Stand	270	6708SDS	201.00			378.00	33.00	411.00	
COMBINATION BROILER – GRIDDLE – TOASTER									
On stand	300	K5729S	$ 210.00					$ 324.00	$ 75.00
On legs	285	K5729	207.00					227.00	75.00
CHAR-BROILERS									
35⅜" deep x 25½" wide	370	361	$ 408.00	$ 468.00	$ 501.00	$ 537.00	$ 49.00	—	
42¼" deep x 25½" wide	400	661	408.00	468.00	501.00	537.00	49.00	—	
35⅜" deep x 25½" wide	370	1361	—					$ 630.00	
42¼" deep x 25½" wide	400	1661						630.00	

HEAVY DUTY CERAMIC BROILER – WITH AU GRATIN OVEN

DESCRIPTION		Model No.	Black Vulcadur	STAINLESS EXTERIORS Front & Top	Front, Top & One Side	Front, Top & Two Sides	Add For Back	Sterling Stainless
HEAVY DUTY CERAMIC BROILER – WITH AU GRATIN OVEN								
Black Vulcadur with black porcelain enameled upper front.	725	6744	$ 504.00	$ 696.00				
Front, top, and full side or sides stainless.	725	6744			$ 768.00	$ 840.00	$ 75.00	$ 945.00
Front, top, one full side, and one half side stainless.	725	6744				807.00		
Front, top, and two half sides stainless.	725	6744				765.00		
Front, top, and one half side stainless.	725	6744			732.00			
ROASTING OVENS – for either 6100 or 6700 Series								
Automatic lighting	745	6799A	$ 609.00	$ 711.00	$ 777.00	$ 843.00	$ 60.00	$ 1,275.00
100% Safety Shut-Off								
Add for Extra Oven Shelves (ea)			7.50	7.50	7.50	7.50	7.50	7.50

VULCAN HART CORPORATION ♦ 3600 NORTH POINT BOULEVARD ♦ BALTIMORE 22, MARYLAND

VULCAN

PRICE SHEET NO.1959AB333X5

Effective January 1, 1959

Terms: F.O.B. Baltimore, Md., 1% Ten Days, Net 30.

VULCAN BAKING & ROASTING OVENS

SPECIFY GAS AND COLOR

Description DECK SIZE 33" x 22"	Ship. Wt. Lbs.	Model No.	Black Baked Vulcadur Complete	Silver-Tone Finish	Stainless Steel Exterior	Sterling Stainless Steel (Add Prefix 1- to Model No.
PIZZA						
1 - 7" Compartment 42" x 32"	725	6030A	549.00	--	918.00	1023.00
Add a Section	675	6030A	528.00	--	843.00	945.00
4 DECK BAKE OVENS						
32 x 20 x 7" Deck Size	775	6761A	480.00	498.00	915.00	N.A.
41 x 30 x 7" Deck Size	1100	6762A	600.00	615.00	1122.00	N.A.
Special Ovens to Meet Veteran's Administration Specifications:						
VA - MC 364 b--January 10, 1952--Sectional Gas Pastry Oven (VULCAN No. 6066 with stainless combustion chamber, linings, air ducts and baffles; black exterior finish.)	1550					1437.00
VA - MC 376 b--August 18, 1948--Sectional Gas Roasters (VULCAN No. 6099 CS with stainless combustion chamber, linings, air ducts, and baffles; black exterior finish.)	1260					1356.00

N. B. All ovens listed above are equipped with automatic lighting and 100% Safety Shut-off, which is a mandatory requirement to carry A.G.A. approval.

BAKERS AND CONFECTIONERS STOVE F.O.B. Louisville, Kentucky						
With One Ring and Cover	190	6526	159.00	--	--	300.00
With Multiple Ring Top	190	6527	159.00	--	--	300.00
Add for 100% Safety Pilot			27.00	--	--	27.00

VULCAN

PRICE SHEET NO.1959AB333X5

Effective January 1, 1959

Terms: F.O.B. Baltimore, Md., 1% Ten Days, Net 30.

VULCAN BAKING & ROASTING OVENS

SPECIFY GAS AND COLOR

Description	Ship. Wt. Lbs.	Model No.	Black Baked Vulcadur Complete	Silver-Tone Finish	Stainless Steel Exterior	Sterling Stainless Steel (Add Prefix 1- to Model No.
DECK SIZE 33" x 22"						
2 - 7" Compartments	590	6014A	396.00	417.00	675.00	897.00
1 - 7" Compartment	465	6015A	345.00	366.00	585.00	813.00
1 - 12" Compartment	475	6017A	360.00	378.00	633.00	855.00
Add for Solid Center Shelf		6017A	33.00	33.00	33.00	33.00
Add for Tile Deck			33.00	33.00	33.00	33.00
If Stainless Steel Back is not required deduct					33.00	
COMBINATIONS						
2-6015	930	6055A	675.00	711.00	1107.00	1545.00
3-6015	1395	6555A	999.00	1053.00	1617.00	2280.00
2-6014	1180	6044A	771.00	807.00	1266.00	1707.00
2-6017	950	6077A	699.00	732.00	1200.00	1650.00
1-6017 & 1-6014	1065	6074A	741.00	768.00	1221.00	1671.00
1-6015 & 1-6014	1055	6054A	726.00	756.00	1179.00	1632.00
1-6017 & 1-6015	940	6075A	690.00	723.00	1155.00	1605.00
1-6017 & 2-6015	1405	6755A	1017.00	1065.00	1671.00	2340.00
DECK SIZE 42" x 32"						
2 - 7" Compartments	775	6016A	453.00	480.00	873.00	1053.00
1 - 7" Compartment	575	6018A	405.00	432.00	744.00	954.00
1 - 12" Compartment	630	6019A	414.00	441.00	804.00	1020.00
Add for Solid Center Shelf		6019A	33.00	33.00	33.00	33.00
Add for Tile Deck			48.00	48.00	48.00	48.00
If Stainless Steel Back is not required deduct					45.00	
COMBINATIONS						
2-6018	1150	6088A	789.00	831.00	1398.00	1809.00
3-6018	1725	6888A	1170.00	1236.00	2028.00	2661.00
2-6016	1550	6066A	885.00	930.00	1599.00	2007.00
2-6019	1260	6099A	807.00	855.00	1506.00	1908.00
1-6019 & 1-6016	1405	6096A	846.00	894.00	1554.00	1959.00
1-6018 & 1-6016	1350	6086A	840.00	879.00	1494.00	1908.00
1-6019 & 1-6018	1205	6098A	798.00	846.00	1452.00	1857.00
1-6019 & 2-6018	1780	6988A	1179.00	1254.00	2112.00	2721.00

VULCAN
RESTAURANT RANGES

PRICE SHEET NO.1959AR333X5

Effective January 1, 1959

Terms: F.O.B. Baltimore, Md., 1% Ten Days, Net 30.

SPECIFY GAS AND COLOR Description	Ship. Wt. Lbs.	Model No.	Black Standard	Silvertone Deluxe	Stainless Steel Front and Sides
36 SERIES — 1 26" OVEN					
6 open burners	430	36L-59	$252.00	$274.50	$438.00
4 open burners-1 hot top section	450	36AL-59	273.00	294.00	457.50
2 open burners-2 hot top sections	485	36BL-59	294.00	313.50	477.00
No open burners-3 hot top sections	510	36CL-59	315.00	333.00	496.50
2 open burners-24" griddle plate	520	36FL-59	282.00	304.50	467.50
No open burners-36" griddle plate	540	36XL-59	291.00	313.50	477.00
Add for porcelain enamel grates, each			4.50	Standard	Standard
Add for stainless steel high shelf			45.00	45.00	--
Deduct for omitting high shelf			12.00	15.00	60.00
Add for 6" flue riser in place of high shelf			9.00	12.00	36.00
60 SERIES — 2 26" Ovens					
10 open burners	720	60L-59	444.00	478.50	735.00
8 open burners-1 hot top section	750	60AL-59	465.00	498.00	756.00
6 open burners-2 hot top sections	775	60BL-59	486.00	517.50	777.00
4 open burners-3 hot top sections	800	60CL-59	507.00	537.00	798.00
2 open burners-4 hot top sections	825	60DL-59	528.00	556.50	819.00
No open burners-5 hot top sections	850	60EL-59	549.00	576.00	840.00
6 open burners-24" griddle plate	860	60FL-59	474.00	508.50	765.00
4 open burners-36" griddle plate	880	60XL-59	483.00	517.50	774.00
Add for porcelain enamel grates, each			4.50	Standard	Standard
Add for stainless steel high shelf			81.00	81.00	--
Deduct for omitting high shelf			18.00	21.00	102.00
Add for 6" flue riser in place of high shelf			12.00	15.00	54.00
160 Series — 1 26" Oven — Low Ceramic Broiler Beneath 24" Griddle Plate					
6 open burners	680	160L-59	348.00	382.50	639.00
4 open burners-1 hot top section	715	160AL-59	369.00	402.00	660.00
2 open burners-2 hot top sections	750	160BL-59	390.00	421.50	681.00
No open burners-3 hot top sections	785	160CL-59	411.00	441.00	702.00
4 open burners-36" griddle over broiler	715	160XL-59	357.00	391.50	648.00
Add for porcelain enamel grates, each			4.50	Standard	Standard
Add for stainless steel high shelf			81.00	81.00	--
Deduct for omitting high shelf			18.00	21.00	102.00
Add for 6" flue riser in place of high shelf			12.00	15.00	54.00
260 Series — 2 26" Ovens — High Ceramic Broiler Beneath 24" Griddle Plate					
6 open burners	825	260L-59	486.00	520.50	774.00
4 open burners-1 hot top section	860	260AL-59	507.00	540.00	795.00
2 open burners-2 hot top sections	895	260BL-59	528.00	559.50	816.00
No open burners-3 hot top sections	930	260CL-59	549.00	579.00	837.00
Add for porcelain enamel grates, each			4.50	Standard	Standard
Add for stainless steel high shelf			81.00	81.00	--
Deduct for omitting high shelf			18.00	21.00	102.00
Add for 6" flue riser in place of high shelf			12.00	15.00	54.00
EXTRAS — All Models					
Oven racks			6.00	6.00	6.00

All units have Automatic Oven Lighting - 100% Safety Shutoff.

VULCAN-HART CORPORATION

3600 North Point Boulevard, Baltimore 22, Maryland

VULCAN

PRICE SHEET NO.1959AR333X5

Effective January 1, 1959

Terms: F.O.B. Baltimore, Md., 1% Ten Days, Net 30.

Terms: F.O.B. Baltimore, Md., 1% Ten Days, Net 30.

36" RESTAURANT RANGE WITH ELEVATED BROILER

Model No.	Top	Black Standard	Silvertone Deluxe	Stainless Steel Front and Sides
36L-6708-59	6 - open burners	$429.00	$451.50	$714.00
36AL-6708-59	4 - open burners - 1 hot top section	450.00	471.00	735.00
36BL-6708-59	2 - open burners - 2 hot top sections	471.00	490.50	756.00
36CL-6708-59	0 - open burners - 3 hot top sections	492.00	509.50	777.00
36FL-6708-59	2 - open burners - 24" griddle plate	459.00	481.50	744.00
36XL-6708-59	0 - open burners - 36" griddle plate	468.00	490.50	753.00
	Add for porcelain enamel grates	4.50	Standard	Standard

RESTAURANT DEEP FAT FRYERS

	Ship. Wt. Lbs.	Model No.	Silvertone	Stainless Steel Front	Stainless Steel Front and Sides
With gas thermostat & safety shut-off	200	6294S	$300.00	$333.00	$402.00
With electric thermostat & safety shut-off	200	6294ES	300.00	333.00	402.00
Add for stainless steel tank			75.00	75.00	75.00
Add for stainless steel tank cover			15.00	15.00	15.00

DOUBLE DECK ROASTING OVENS

399A	Double Deck Roasting Oven	Black Vulcadur	$366.00
399A	Double Deck Roasting Oven	Silvertone	387.00
399A	Double Deck Roasting Oven	Stainless front, sides, and top	567.00

All units have Automatic Oven Lighting - 100% Safety Shut-Off

VULCAN·HART

STAINLESS STEEL STEAM JACKETED
KETTLES
MEAT ROASTERS COFFEE URNS

PRICE LIST

1959C25

Effective January 1, 1959

GAS KETTLES, MEAT ROASTERS, AND COFFEE URNS

KETTLES Model No.	Draw-off Valve Size	Approx. Shipping Weight	Price On Legs	Price With Thermostat
Standard Type				
GKST-40	1-1/2"	340#	$ 915.00	$ 1015.00
GKST-60	1-1/2"	445	1080.00	1180.00
GKST-80	1-1/2"	525	1200.00	1300.00
GKST-100	2"	645	1400.00	1500.00
Low Type				
GKL-20	1-1/2"	265	750.00	850.00
GKL-30	1-1/2"	325	840.00	940.00
GKL-40	1-1/2"	410	915.00	1015.00
GKL-60	1-1/2"	510	1080.00	1180.00
GKL-80	2"	625	1275.00	1375.00
Shallow Type				
GKSH-13	1-1/2"	275	725.00	825.00
GKSH-20	1-1/2"	330	750.00	850.00
GKSH-30	1-1/2"	385	840.00	940.00
GKSH-40	1-1/2"	425	915.00	1015.00
GKSH-60	2"	510	1155.00	1255.00
MEAT ROASTER				
GKSHM-13	2"	275	800.00	900.00
GKSHM-20	2"	330	850.00	950.00
GKSHM-30	2"	425	915.00	1015.00
GKSHM-40	2"	510	990.00	1090.00

All of the above units come completely equipped with sanitary diary plug type draw-off valve, Parker Bee-Line burner with simmering burner, safety pilot control connected to low water cutoff, and relief valve, completely assembled at factory, ready for installation.

COFFEE URNS				
GCUER-40		490	1300.00	1400.00
GCUER-70		600	1450.00	1550.00
GCUER-85		700	1575.00	1675.00
GCUER-100		775	1680.00	1780.00
GCUER-125		860	1830.00	1930.00
GCUER-150		960	2025.00	2125.00

ELECTRIC KETTLES, MEAT ROASTERS, AND COFFEE URNS

KETTLES Model No.	Draw-off Valve Size	Approx. Shipping Weight	Price On Legs	Price On Pedestal Base	Add For Increased Wattage	
Standard Type						
EKST-40	1-1/2"	340#	$ 980.00	$1040.00	$100.00	18 KW w/contactor
EKST-60	1-1/2"	445	1145.00	1205.00	125.00	24 KW "
EKST-80	1-1/2"	525	1325.00	1385.00	150.00	36 KW "
EKST-100	2"	645	1450.00	1510.00	150.00	36 KW "
Low Type						
EKL-20	1-1/2"	225	860.00	920.00	25.00	12 KW "
EKL-30	1-1/2"	290	945.00	1005.00	25.00	12 KW "
EKL-40	1-1/2"	340	980.00	1040.00	100.00	18 KW "
EKL-60	1-1/2"	400	1145.00	1205.00	125.00	24 KW "
EKL-80	2"	440	1400.00	1475.00	150.00	36 KW "
Shallow Type						
EKSH-13	1-1/2"	250	800.00	860.00	25.00	12 KW "
EKSH-20	1-1/2"	275	860.00	920.00	25.00	12 KW "
EKSH-30	1-1/2"	325	945.00	1005.00	25.00	12 KW "
EKSH-40	1-1/2"	410	980.00	1040.00	100.00	18 KW "
EKSH-60	2"	450	1220.00	1280.00	125.00	24 KW "
MEAT ROASTER						
EKSH-13	2"	250	875.00	935.00	25.00	12 KW "
EKSH-20	2"	275	935.00	995.00	25.00	12 KW "
EKSH-30	2"	325	1020.00	1080.00	25.00	12 KW "
EKSH-40	2"	410	1055.00	1115.00	100.00	18 KW "

All of the above units are completely equipped with sanitary dairy plug type draw-off valve, heating elements, thermostatic control. low water cutoff, and relief valve, completely assembled at factory, ready for installation.

COFFEE URN						
ECUER-40		410	1400.00	— —	100.00	18 KW w/contactor
ECUER-70		480	1520.00	— —	125.00	24KW "

STEAM KETTLES, MEAT ROASTERS, AND COFFEE URNS

KETTLES Model No.	Draw-off Valve Size	Approx. Shipping Weight	Price On Legs	Price On Pedestal Base
Standard Type				
KST-40	1-1/2"	280#	$ 640.00	$ 700.00
KST-60	1-1/2"	335	700.00	760.00
KST-80	1-1/2"	410	890.00	950.00
KST-100	2"	495	1000.00	1060.00
KST-120	2"	525	1075.00	--
KST-140	2"	550	1275.00	--
Low Type				
KL-20	1-1/2"	190	450.00	510.00
KL-30	1-1/2"	240	575.00	635.00
KL-40	1-1/2"	310	640.00	700.00
KL-60	1-1/2"	370	700.00	760.00
KL-80	2"	430	965.00	1025.00
Shallow Type				
KSH-13	1-1/2"	175	425.00	485.00
KSH-20	1-1/2"	230	450.00	510.00
KSH-30	1-1/2"	310	575.00	635.00
KSH-40	1-1/2"	400	640.00	700.00
KSH-60	2"	420	775.00	835.00
MEAT ROASTER				
KSHM-13	2"	175	500.00	560.00
KSHM-20	2"	230	525.00	585.00
KSHM-30	2"	310	650.00	710.00
KSHM-40	2"	400	715.00	775.00

All of the above units come completely equipped with sanitary dairy plug type draw-off valve, steam trap assembly with check valve, steam supply valve with simmering valve, and relief valve, assembled to unit at factory, ready for installation.

An electric thermostat with solenoid valve can be added for.....$125.00 List.

COUNTER TILTING TYPE			
TC-10	10 quart	35#	275.00
TC-20	20 quart	40	300.00
Cover			
COFFEE URNS			
CUER-40		410	1030.00
CUER-70		480	1160.00
CUER-85		540	1280.00
CUER-100		615	1395.00
CUER-125		700	1530.00
CUER-150		800	1730.00

OPTIONAL EQUIPMENT

Strainers	$ 12.00
Swinging Spout - mounted to kettle	30.00
Swinging Spout - with double faucet - mounted to kettle	45.00
Graduated Measuring Rod - Stainless	10.00
2" Draw-off Valve in place of 1-1/2"	75.00
3" Draw-off Valve in place of 1-1/2"	150.00
3" Draw-off Valve in place of 2"	75.00
Kettles Requiring Pennsylvania Inspection	50.00

Write for detailed information and engineering data on this equipment.

All prices quoted are F.O.B. Factory, Louisville, Kentucky.

TERMS: Net 30 days.

Prices subject to change without notice.

This price list does not include any federal, state, city, or local taxes which may be applicable, and all sales are made subject thereto.

Vulcan-Hart Corporation

P. O. BOX 696, LOUISVILLE 1, KENTUCKY

HART

PRICE SHEET NO.1959B50

Effective January 1, 1959

PRICE LIST

TERMS: F. O. B., LOUISVILLE, KY., (unless otherwise noted). Net thirty days from date of invoice.

PRICES: ALL PRICES ARE SUBJECT TO CHANGE WITHOUT NOTICE. ALL ORDERS WIIL BE ACCEPTED WITH THE UNDERSTANDING THAT PRICES WILL BE THOSE IN EFFECT AT TIME OF SHIPMENT. These prices are exclusive of all sales taxes or any special taxes which may be levied by Federal, State or City Governments.

ORDERS: In ordering, please specify complete information. All orders are taken contingent upon strikes, fires, accidents or any other causes beyond our control. NO GOODS SENT ON CONSIGNMENT. ORDERS FOR FUTURE DELIVERY MUST SPECIFY A DEFINITE DATE and are not subject to cancellation.

CLAIMS: All claims for breakage must be made within TEN DAYS from receipt of goods, and must be accompanied by the paid freight bill with proper notation of the same thereon. GOODS CANNOT BE RETURNED WITHOUT WRITTEN PERMISSION, and when returned, freight must be PREPAID and articles are subject to our regular 10% Handling Charge. All appliances of special size or design are made to order and are NOT RETURNABLE. (This also applies to repair parts for obsolete appliances.)

PLEASE SPECIFY TYPE OF GAS TO BE USED

VULCAN

Manufacturing a Complete Line of Equipment for the Mass Feeding Industry: Heavy Duty Ranges • Broilers • Baking Ovens • Roasting Ovens • Restaurant Ranges • Griddles • Deep Fat Friers • Food Warmers • Food Mixers • Self-Leveling Dispensers • Dishwashers

VULCAN-HART CORPORATION P. O. BOX 696 LOUISVILLE, KY.

HART RESTAURANT RANGES F.O.B. BALTIMORE, MARYLAND (Approved by American Gas Association)

MODEL NO.	DESCRIPTION	SHIPPING WEIGHT	LIST PRICE BLACK	LIST PRICE STAINLESS STEEL
H-101L-59	36" Wide - 6 Open Burners - 1-26" Oven	410#	$320.00	$550.00
H-102L-59	60" Wide - 10 Open Burners - 2-26" Ovens	750#	562.00	930.00
H-103L-59	63" Wide - 6 Open Burners - 1-26" Oven Low Broiler - 24" Griddle	760#	440.00	810.00
H-104L-59	63" Wide - 6 Open Burners - 2-26" Ovens Raised Broiler - 24" Griddle	860#	620.00	980.00
Deduct for Broiler Ceramics (103-104)			10.00	10.00
Extra Oven Rack			8.00	8.00
For Hot Top Section in place of 2 open burners, Add -			30.00	30.00
H-399A ROAST OVEN		600#	464.00	718.00
H-6294S DEEP FAT FRYER		225#	380.00	509.00

HART LUNCHEONETTE (Approved by American Gas Association)

MODEL NO.	DESCRIPTION	WEIGHT	LIST PRICE
142	Black Enamel w/ thermostat & lighters, w/ high shelf	365#	$292.00
142	Black Enamel w/ thermostat & lighters, w/ back guard	365#	286.00
SS-142	Stainless Steel w/ thermostat & lighters, w/ high shelf	365#	466.00
SS-142	Stainless Steel w/ thermostat & lighters, w/ back guard	365#	532.00
142-30	Black Enamel w/ thermostat & lighters, w/ high shelf	365#	346.00
142-30	Black Enamel w/ thermostat & lighters, w/ back guard	365#	340.00
SS-142-30	Stainless Steel w/ thermostat & lighters, w/ high shelf	365#	522.00
SS-142-30	Stainless Steel w/ thermostat & lighters, w/ back guard	365#	490.00
	For Automatic Oven Lighting (Required after 1/1/57) Add -		40.00

HART COAL AND OIL BURNING RANGES

COAL BURNING RANGES		
No. 5 U. S. Army Range w/ "U" water box	900#	$432.00
No. 5 U. S. Army Range w/ solid "U" linings	900#	420.00
No. 5 DeLuxe Range w/ "U" water box	900#	500.00
No. 5 DeLuxe Range w/ solid "U" linings	900#	488.00
OIL BURNING RANGES		
No. 5 DeLuxe Range w/ "U" water box	900#	736.00
No. 5 DeLuxe Range w/ solid "U" linings	900#	722.00
*No. 15-HTL or 15-HTR Range with Hot Top	1350#	872.00
*No. 15-GPL or 15-GPR Range with Fry Plate	1500#	892.00
* No. 25 Double Oven Range	2000#	1,100.00

* These Ranges are equipped with hot top panels and refractory linings.
These Ranges meet Military Specification MIL-R-11038 (QMC)

HART HEAVY DUTY GRIDDLES

MODEL NO.	GRIDDLE PLATE SIZE WIDE DEEP THICK	HEIGHT	BURNERS	APPROX. WEIGHT	LIST PRICE BLACK	LIST PRICE STAINLESS STEEL
	COUNTER MODELS					
736	36" x 24" x 3/4"	9"	4	330#	$292.00	$546.00
748	48" x 24" x 3/4"	9"	6	430#	354.00	636.00
760	60" x 24" x 3/4"	9"	8	525#	420.00	724.00
	With 2 Open Burners (either end) add -				128.00	153.00
	With 4 Open Burners (either end) add -				191.00	242.00
	STAND MODELS					
736-1	36" x 24" x 3/4"	34"	4	375#	336.00	700.00
748-1	48" x 24" x 3/4"	34"	6	480#	408.00	812.00
760-1	60" x 24" x 3/4"	34"	8	580#	476.00	928.00
	With 2 Open Burners (either end) add -				132.00	160.00
	With 4 Open Burners (either end) add -				204.00	254.00
	(Stands shipped Knocked Down, simple assembly; if desired completely assembled to griddle, ADD				30.00	30.00
	For thermostatically controlled add for every 2 burners				72.00	72.00

PLEASE SPECIFY TYPE OF GAS

THRIFTY GRIDDLES AND STANDS

THRIFTY GRIDDLE

MODEL NO.	GRIDDLE SIZE	NUMBER OF OPEN BURNERS	OVERALL SIZE	SHIPPING WEIGHT	LIST PRICE NO LIGHTER	LIST PRICE W/LIGHTER
1	18" x 18"	0	18x22x9	65 lb.	$ 54.00	$ 57.00
2	24" x 18"	0	24x22x9	75 lb.	65.00	74.00
3	30" x 18"	0	30x22x9	100 lb.	76.00	84.00
4	18" x 18"	2	30x22x9	90 lb.	75.00	83.00
5	24" x 18"	2	36x22x9	100 lb.	87.00	100.00
6	30" x 18"	2	42x22x9	120 lb.	100.00	110.00

THRIFTY BROILER GRIDDLE

24-BG	24" x 20"	0	24x20x12	150 lb.	$130.00

THRIFTY GRIDDLE STANDS

MODEL NO.	SIZE	SHIPPING WGT.	LIST PRICE
40	30" W x 18"D x 26-1/4"H - Use w/ #3 or #4 Thrifty Griddle	40 lb.	$32.00
50	36"W x 18"D x 26-1/4"H - Use w/ #5 Thrifty Griddle	45 lb.	36.00
60	42"W x 18"D x 26-1/4"H - Use w/ #6 Thrifty Griddle	50 lb.	38.00

(Shipped Knocked Down in Cartons - Easily assembled)

* * * * * * * *

HART STAINLESS COUNTER APPLIANCES

HART STAINLESS STEEL GRIDDLES

MODEL NO.		GRIDDLE SIZE	OVERALL SIZE	WEIGHT	LIST PRICE
624	Thermogrid (w/thermostat)	24" x 20"	24x20x10-1/2	130#	$175.00
636	Thermogrid (w/thermostat)	36" x 20"	36x20x10-1/2	185#	200.00
524	Hi-Med-Low Valves	24" x 20"	24x20x10-1/2	120#	110.00
530	Hi-Med-Low Valves	30" x 20"	30x20x10-1/2	155#	135.00
536	Hi-Med-Low Valves	36" x 20"	36x20x10-1/2	175#	150.00

All of the above Griddles are equipped with lighters.

HART STAINLESS STEEL COMBINATION GRIDDLE & OPEN BURNERS

MODEL NO.	MANUAL CONTROL	OPEN BURNERS	GRIDDLE SIZE	OVERALL SIZE	WEIGHT	LIST PRICE
518-2	Hi-Med-Low Valves	2	18" x 20"	30x20x10-1/2	150#	$135.00
524-2	Hi-Med-Low Valves	2	24" x 20"	36x20x10-1/2	165#	150.00
536-2	Hi-Med-Low Valves	2	36" x 20"	48x20x10-1/2	215#	190.00

All the above are equipped with lighters.

HART OPEN BURNER UNITS

MODEL NO.	MANUAL CONTROL	OPEN BURNERS	OVERALL SIZE	WEIGHT	LIST PRICE
5120	Hi-Med-Low Valves	2	12x20x10-1/2	48#	$ 58.00
5240	Hi-Med-Low Valves	4	24x20x10-1/2	105#	100.00

All the above are equipped with lighters.

VULCAN-HART GAS FRYER

MODEL NO.		STAINLESS STEEL TANK WEIGHT	STAINLESS STEEL TANK MODEL NO.	STAINLESS STEEL TANK LIST PRICE	PLATED STEEL TANK MODEL NO.	PLATED STEEL TANK LIST PRICE
GF18	Natural or Mixed Gas	80#	*GF18	$254.00	*GF18PT	$235.00
GF18S	Natural or Mixed Gas w/ safety pilot	80#	GF18S	283.00	GF18PTS	264.00
GF18F	Manufactured Gas	80#	*GF18F	254.00	*GF18PTF	235.00
GF18FS	Manufactured Gas w/ safety pilot	80#	GF18FS	283.00	GF18PTFS	264.00
GF18LPS	Bottled Gas w/ safety pilot	80#	GF18LPS	283.00	GF18PTLPS	264.00

*After 1/1/57 A.G.A. requires all fryers to have safety pilots.

Price includes twin fry basket. Single fry basket optional.

PLEASE SPECIFY TYPE OF GAS

HART STAINLESS STEEL STANDS

MODEL	DESCRIPTION	WEIGHT	LIST PRICE
SS530	30" wide x 20" deep x 24-1/4" high	38#	$ 86.50
SS530B	Same as SS530 but includes a back	45#	102.00
SS536	36" wide x 20" deep x 24-1/4" high	40#	95.00
SS536B	Same as SS536 but includes a back	50#	112.00
SS542	42" wide x 20" deep x 24-1/4" high	43#	104.00
SS542B	Same as SS542 but includes a back	55#	126.00
SS548	48" wide x 20" deep x 24-1/4" high	45#	111.00
SS548B	Same as SS548 but includes a back	60#	133.00
	CUTTING BOARDS		
B-24	24" wide x 7" deep x 1-1/4" thick	6#	19.00
B-30	30" wide x 7" deep x 1-1/4" thick	7#	19.00
B-36	36" wide x 7" deep x 1-1/4" thick	8#	19.00
B-42	42" wide x 7" deep x 1-1/4" thick	9#	22.00
B-48	48" wide x 7" deep x 1-1/4" thick	10#	22.00

HART STAINLESS STEEL FOOD WARMERS

MODEL NO.		APPROXIMATE SHIPPING WGT.	LIST PRICE
F - 36 - SC	36" Food Warmer with ABC panels, 1 #165 meat pan, 1 WC-12 warming cover, 2 8-1/2" insets and covers, 2 6-1/2" insets and covers.	100 lbs.	$231.00
F - 361 - S	36" Food Warmer with ABC panels, 1 #165 meat pan, 1 WC-12 warming cover, 2 8-1/2" insets and covers, 2 6-1/2" insets and covers, 1 B-36 cutting board, 1 SS-536 Stand.	150 lbs.	345.00
F - 361 - SB	Same as F-361-S but with SS-536B Stand.	160 lbs.	362.00
F - 481 - SC	48" Food Warmer with AABC panels, 2 #165 meat pans, 2 WC-12 warming covers, 2 8-1/2" insets with covers, 2 6-1/2" insets with covers.	120 lbs.	299.00
F - 481 - S	48" Food Warmer with AABC panels, 2 #165 meat pans, 2 WC-12 warming covers, 2 8-1/2" insets with covers, 2 6-1/2" insets with covers, 1 B-48 cutting board, 1 SS-548 Stand.	165 lbs.	432.00
F - 481 - SB	Same as F-481-S but with SS-548-B Stand	180 lbs.	454.00
F - 360	Food Warmer, only - Choice of Top Panels	84 lbs.	118.00
F - 480	Food Warmer, only - Choice of Top Panels	95 lbs.	147.00
WC-12	Warming Cover	5-1/4 lbs.	25.00
165	Meat Pan	2-1/2 lbs.	14.00
S - 8	8-1/2" Inset with Cover	3 lbs.	20.00
S - 6	6-1/2" Inset with Cover	2 lbs.	17.00
SS - 536	Stand - Use with F-360	40 lbs.	95.00
SS - 536B	Stand - with Back - Use with F-360	50 lbs.	112.00
SS - 548	Stand - Use with F-480	45 lbs.	111.00
SS - 548B	Stand - with Back - Use with F-480	60 lbs.	133.00
B - 36	Cutting Board complete w/ Brackets - Use with F-360	8 lbs.	19.00
B - 48	Cutting Board complete w/ Brackets - Use with F-480	10 lbs.	22.00

HART 3418 GRIDDLE

No. 3418 meets military specification MIL-G-002239 — 165 lbs. — $315.00

VULCAN·HART MANUFACTURING CO.

2006 NORTHWESTERN PARKWAY LOUISVILLE 3, KENTUCKY

VULCAN

PRICE SHEET NO.1959F333X5

Effective January 1, 1959

Terms: F.O.B. Baltimore, Maryland

HEAVY DUTY ELECTRIC COOKING EQUIPMENT

Description	Ship. Weight Lbs.	Model No.	Standard Stainless Front	Stainless Steel Exterior: Front and One Side	Front and Two Sides	Add for Back	Add for Top	Add for Stainless Legs	All Stainless
HEAVY DUTY RANGES - with ovens and with legs or toe base									
Hot Top Range	680	VR-1	795.00	846.00	897.00	72.00		12.00	
All Purpose Top Range	680	VR-2	927.00	978.00	1029.00	72.00		12.00	
Hot Top and Hot Plate Range	660	VR-3	927.00	978.00	1029.00	72.00	12.00	12.00	
Hot Plate Range	600	VR-4	624.00	675.00	726.00	72.00	36.00	12.00	
Fry Top Range	600	VR-5	873.00	924.00	975.00	72.00		12.00	
Hot Plate and Two All Purpose Plates Range	680	VR-6	927.00	978.00	1029.00	72.00	12.00	12.00	
Extra Oven Rack			7.50			-		-	
RANGE TOPS - with storage compartment base with legs or toe base									
Hot Top Comp. Base	560	VS-1	618.00	669.00	720.00	72.00		12.00	
All Purpose Top Comp. Base	560	VS-2	648.00	699.00	750.00	72.00		12.00	
Hot Top and Hot Plate Top Comp. Base	540	VS-3	774.00	825.00	876.00	72.00	12.00	12.00	
Hot Plate Top - Comp. Base	480	VS-4	513.00	564.00	615.00	72.00	36.00	12.00	
Fry Top - Comp. Base	480	VS-5	567.00	618.00	669.00	72.00		12.00	
Hot Plate and Two All Purpose Plates with Comp. Base	560	VS-6	648.00	699.00	750.00	72.00	12.00	12.00	
RANGE TOPS - with warming oven base with legs or toe base									
Hot Top and Warming Oven	625	VW-1	717.00	768.00	819.00	72.00		12.00	
All Purpose Top and Warming Oven	625	VW-2	735.00	786.00	837.00	72.00		12.00	
Hot Top and Hot Plate Top - Warming Oven	605	VW-3	849.00	900.00	951.00	72.00	12.00	12.00	
Hot Plate Top and Warming Oven	535	VW-4	588.00	639.00	690.00	72.00	36.00	12.00	
Fry Top and Warming Oven	535	VW-5	735.00	786.00	837.00	72.00		12.00	
Hot Plate and Two All Purpose Plates with Warming Oven	625	VW-6	735.00	786.00	837.00	72.00	12.00	12.00	
EXPANDO UNITS - with legs or toe base									
Hot Top Unit	205	VEX-1	264.00	315.00	366.00	33.00		12.00	
All Purpose Top	205	VEX-2	273.00	324.00	375.00	33.00		12.00	
Hot Plate Top	185	VEX-3	273.00	324.00	375.00	33.00	12.00	12.00	
SPREADER PLATES									
6" Spreader	25	VSP-6	30.00	(Specify Right or Left Side)			9.00		39.00
12" Spreader	40	VSP-12	36.00	" " " " "			12.00		48.00
18" Spreader	55	VSP-18	42.00	" " " " "			15.00		57.00
ENCLOSURE PLATES									
6" Enclosure Plate	10	VSPD-6	-	-	-	-		-	6.00
12" Enclosure Plate	18	VSPD-12	-	-	-	-		-	9.00
18" Enclosure Plate	25	VSPD-18	-	-	-	-		-	15.00

VULCAN

HEAVY DUTY ELECTRIC COOKING EQUIPMENT

Description	Ship. Weight Lbs.	Model No.	Standard Stainless Front	Stainless Steel Exterior: Front and One Side	Front and Two Sides	Add for Back	Add for Top	Add for Stainless Legs	All Stainless
FRYERS - with legs									
Tilt Element Fryer (1 Kettle) Twin Baskets	215	VF-1	411.00	462.00	513.00	48.00	-	12.00	
Extra Large Basket (Welded Wire Mesh)			21.00						-
Extra Set Twin Baskets - Set (Welded Wire Mesh)			21.00						
Syphon Filter			18.90						
Extra Fry Tank			18.30						
BROILERS									
Salamander Broiler	240	VB-1	330.00			-	-	-	585.00
Single Broiler Unmounted	360	VB-2	462.00	498.00	534.00	69.00	60.00	-	-
Single Broiler with Comp. Base	720	VB-2S	690.00	834.00	978.00	150.00	75.00	-	-
Single Broiler with Warming Oven	785	VB-2W	840.00	984.00	1128.00	150.00	75.00	-	-
Single Broiler with Oven	810	VB-2-1	1020.00	1166.00	1308.00	150.00	75.00	-	-
Double Broiler with Comp. Base	975	VB-22S	1086.00	1257.00	1428.00	210.00	75.00	-	-
Double Broiler with Warming Oven	1040	VB-22W	1236.00	1407.00	1578.00	210.00	75.00	-	-
Double Broiler with Oven	1065	VB-22-1	1410.00	1581.00	1761.00	210.00	75.00	-	-
(VB-1 Salamander Broiler may be mounted over V0-01 Oven for Battery Installation.)									
LEGS AND TOE BASES									
Adj. Sanitary Legs (set of 4)	10	3" - 4"	All Units are Chrome Plated - $15.00						
Adj. Sanitary Legs (set of 4)	12	4" - 6"	All Units are Chrome Plated - $21.00						
Toe Base all Units (Silvertone)			Stainless Steel, extra - $21.00						
DOUBLE DECK HIGH SHELVES									
12" High Shelf	40	VDD-12	48.00	(Standard - Stainless Front and Sides)					105.00
18" High Shelf	55	VDD-18	60.00	(Standard - Stainless Front and Sides)					126.00
20" High Shelf	70	VDD-20	63.00	(Standard - Stainless Front and Sides)					132.00
36" High Shelf	115	VDD-36	78.00	(Standard - Stainless Front and Sides)					150.00
42" High Shelf	125	VDD-42	81.00	(Standard - Stainless Front and Sides)					162.00
48" High Shelf	140	VDD-48	87.00	(Standard - Stainless Front and Sides)					189.00
GRIDDLES									
Griddle 20" x 36"	190	EHG-20		(Units available in complete Stainless Steel only)					285.00
Griddle 26" x 36"	255	EHG-26		(Units available in complete Stainless Steel only)					414.00
Stand for above				(Units available in complete Stainless Steel only)					132.00
RESTAURANT RANGE									
Two Ovens, Broiler-Griddle, Six Elements	875	E-260	Silvertone 795.00**	-	1074.00	-	-	-	-
** Standard Finish - Silvertone									

BE SURE TO SPECIFY VOLTAGE AND PHASE

VULCAN

HEAVY DUTY ELECTRIC COOKING EQUIPMENT

Description	Ship. Weight Lbs.	Model No.	Standard Stainless Front	Stainless Steel Exterior: Front and One Side	Front and Two Sides	Add for Back	Add for Top	Add for Stainless Legs	All Stainless
SINGLE PAN ALL PURPOSE OVEN									
Single Deck - no base or legs	500	V0-01NB	477.00	528.00	579.00	72.00	60.00	-	-
Single Deck - long or short legs (May be ordered for Range Battery Installation)	540	V0-01	510.00	561.00	612.00	72.00	60.00	12.00	-
Two Deck - with legs	900	V0-02	975.00	1065.00	1155.00	132.00	60.00	12.00	-
TWO PAN BAKE OVEN									
Single Section - no base	525	V0-004NB	612.00	651.00	690.00	72.00	105.00	-	-
Single Section - with legs	700	V0-004	756.00	801.00	846.00	90.00	105.00	66.00	-
Two Sections - with legs	1200	V0-044	1365.00	1455.00	1545.00	162.00	105.00	54.00	-
Three Sections - with legs	1700	V0-444	1911.00	2046.00	2181.00	234.00	105.00	21.00	-
FOUR PAN BAKE OVEN									
Single Section - no base	940	V0-006NB	999.00	1065.00	1131.00	72.00	159.00	-	-
Single Section - with legs	1225	V0-006	1230.00	1311.00	1392.00	90.00	159.00	66.00	-
Two Sections - with legs	2100	V0-066	2184.00	2331.00	2478.00	162.00	159.00	54.00	-
Three Sections - with legs	3000	V0-666	3162.00	3366.00	3570.00	234.00	159.00	21.00	-
SIX PAN BAKE OVEN									
Single Section - no base	1175	V0-007NB	1326.00	1392.00	1458.00	90.00	198.00	-	-
Single Section - with legs	1510	V0-007	1545.00	1626.00	1707.00	114.00	198.00	66.00	-
Two Sections - with legs	2600	V0-077	2871.00	3018.00	3165.00	204.00	198.00	54.00	-
Three Sections - with legs	3700	V0-777	4179.00	4383.00	4587.00	294.00	198.00	21.00	-
TWO PAN ROAST OVEN									
Single Section - no base	575	V0-008NB	618.00	663.00	708.00	81.00	105.00	-	-
Single Section - with legs	750	V0-008	756.00	807.00	858.00	99.00	105.00	54.00	-
Two Sections - with legs	1285	V0-088	1365.00	1464.00	1563.00	177.00	105.00	45.00	-
Three Sections - with legs	1785	V0-888	1950.00	2100.00	2250.00	255.00	105.00	21.00	-
TWO PAN COMBINATION BAKE AND ROAST OVEN									
One Bake - One Roast Section	1225	V0-048	1365.00	1449.00	1533.00	171.00	105.00	45.00	-
Two Bake - One Roast Section	1750	V0-448	1959.00	2082.00	2205.00	243.00	105.00	45.00	-
One Bake - Two Roast Sections	1825	V0-488	1947.00	2076.00	2205.00	249.00	105.00	21.00	-
TWO PAN PIZZA OVENS									
Single Section - no base	525	V0-004PNB	636.00	675.00	714.00	72.00	105.00	-	-
Single Section - with legs	700	V0-004P	789.00	834.00	889.00	90.00	105.00	66.00	-
Two Sections - with legs	1200	V0-044P	1428.00	1518.00	1608.00	162.00	105.00	54.00	-
Three Sections - with legs	1700	V0-444P	2031.00	2166.00	2301.00	234.00	105.00	21.00	-

Internal Steam Connections Installed at Factory Only - $21.00 per Bake Deck.

BE SURE TO SPECIFY VOLTAGE AND PHASE

VULCAN-HART ROLL AND FOOD WARMERS (Electric)

Model No.	CABINET SIZE Wide	Deep	High	Roll Capacity	Weight Pounds	PRICE With Legs	Without Legs	On Casters
2 DRAWER MODELS								
2L58	29-1/4"	19-1/4"	21-3/8"	14 dozen	175	--	$327.00	--
3 DRAWER MODELS								
3L58	29-1/4"	19-1/4"	29-3/8"	21 dozen	300	$444.00	$429.00	--
4 DRAWER MODELS								
4L58	29-1/4"	19-1/4"	43-3/8"	28 dozen	350	$498.00	$489.00	--
4LC58	29-1/4"	19-1/4"	43-3/8"	28 dozen	400	--	--	$555.00

NOTE TO CALIFORNIA DEALERS

In California there is a code for electrical appliances which requires a special "Dead Front" construction. This entails additional costs and the following list prices must be added to all California orders:

ADD TO REGULAR PRICES		PER UNIT NET
For Add-A-Unit	add	$ 4.00
For Ranges w/oven, except 6 burner unit (VR-4) and Fry Top (VR-5)	"	20.00
For Fry Top Ranges and 6 burner top	"	15.00
For all units with cabinet base	"	15.00
For Salamander	"	2.00
For Large Single Broiler	"	11.00
For Broiler and Oven	"	17.00
For 2 Broilers and Oven	"	18.00
For 1 Broiler and Cabinet Base	"	15.00
For 2 Broilers and Cabinet Base	"	20.00
For all 2 Pan Ovens	"	5.00 per section
For all 4 Pan Ovens	"	9.00 per section
For all 6 Pan Ovens	"	11.00 per section
For all - All-Purpose Ovens	"	6.00 per section

VULCAN·HART

PRICE LIST
NO.1959D333
EFFECTIVE January 1, 1959

Superseding All Previous Price Lists

TERMS

F.O.B. LOUISVILLE, KENTUCKY NET 30

ELECTRIC COUNTER EQUIPMENT

FRYERS

MODEL NO.	DESCRIPTION	RATED WATTAGE	WEIGHT POUNDS	LIST PRICE **
EF18	VULCAN-HART Electric Counter Fryer w/twin baskets and removable stainless steel kettle	5 KW	44	$162.00
EF18PT	Fryer with Plated Kettle	5 KW	44	142.50

GRIDDLES

EG18	VULCAN-HART Electric Counter Griddle 16-3/16" wide x 15¾" deep	4 KW	69	117.00
EG24	VULCAN-HART Electric Counter Griddle 21-7/16" wide x 15¾" deep	5.6 KW	86	174.00
EG36	VULCAN-HART Electric Counter Griddle 34-3/16" wide by 15¾" deep	8.6 KW	126	198.00
3418E	Electric Griddle - Mil. Spec.	8.6 KW	200	247.50

HOT PLATES

EH12	VULCAN-HART Hot Plate (2 - 6" Heating Units)	2.5 KW	24	78.00

FOOD WARMERS

EW12	VULCAN-HART Food Warmer (Shell only w/opening for No. 165 Meat Pan)	8 KW	27	75.00

No. 165 Meat Pan Insert	10.50
No. WC12 Warming Cover	18.75
No. EW12A Adapter for 2 - 6½" insets	12.00
No. S6 - 6½" Insets and Covers. Each	12.75

EW24	VULCAN-HART Food Warmer (Shell only w/opening for No. 200 Pan)	1.65 KW	40	108.00

No. EW24A Adapter for 2 - 8" Insets	13.50
No. S8 - 8" Insets and Covers. Each	15.00
No. 7742 Hinged Dome Cover	30.00

All units available in 208V AC or 230V AC.
EW12 and EW24 also available in 110V AC.
50 amp — 36" — 3 prong cord — suitable for any unit above $7.50.

VULCAN·HART CORPORATION
P. O. BOX 696 LOUISVILLE, KY.

MAR 13 1959

Design Division

KANSAS STATE LIBRARY

VULCAN · HART